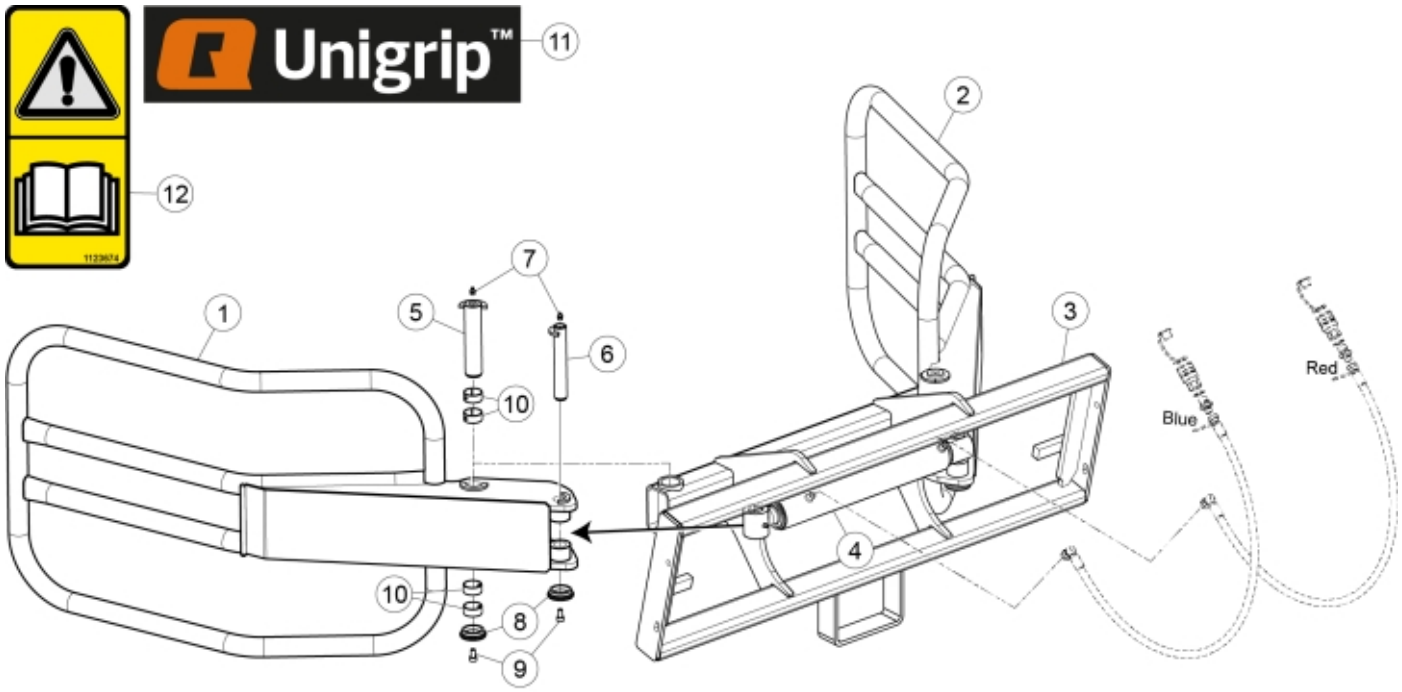

R 11250770

© 2025 Jost

Part assemblies	Unigrip 130
Specification	Year From: 1/1/2011 12:00:00 AM

PartNo	Pos	Qty	Name	Specifications
1510308-17	1	1 PCS	Arm left	
1510309-17	2	1 PCS	Arm right	
60032831-17	3	1 PCS	Frame	
12710710-1	4	1	Cylinder	Glossy Black
1116485	5	2	Pin	
1116806	6	2	Pin	
5023005	7	4	Greaser	M 10 x 1
5215131	8	4	Locking cover	
5050608	9	4	Screw	MC6S M10x20 Loc
5018513	10	8	Bushing	D40 L=20
11137139	11	2	Decal	Unigrip
1123674	12	1	Warning decal	"Read manual"

© 2025 Jost