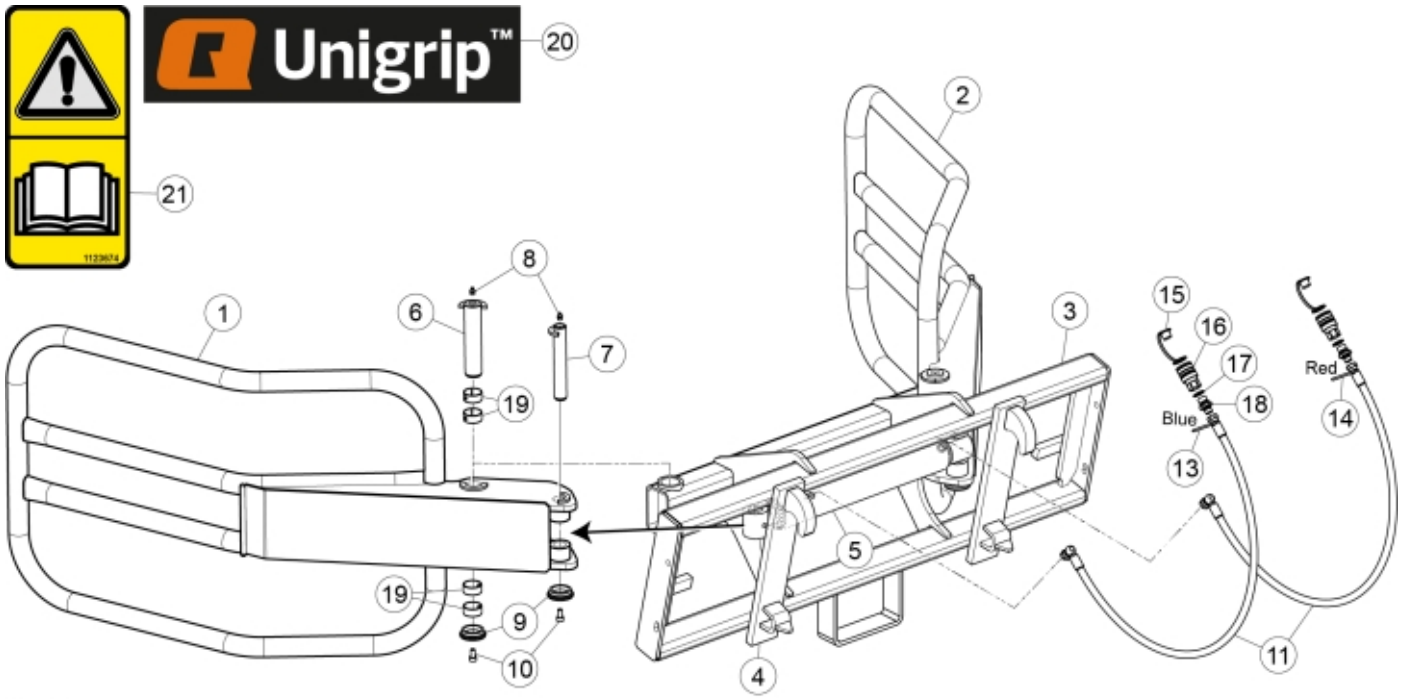

R 11250775

© 2025 Jost

Part assemblies	Unigrip 130, SMS
Specification	Year From: 1/1/2011 12:00:00 AM

PartNo	Pos	Qty	Name	Specifications
1510308-17	1	1 PCS	Arm left	
1510309-17	2	1 PCS	Arm right	
60032833-17	3	1 PCS	Frame	
830437	4	2 PCS	• Implement hook	SMS
12710710-1	5	1	Cylinder	Glossy Black
1116485	6	2	Pin	
1116806	7	2	Pin	
5023005	8	4	Greaser	M 10 x 1
5215131	9	4	Locking cover	
5050608	10	4	Screw	MC6S M10x20 Loc
10377022		1	Hose kit	
1103117	11	2	• Hose	3/8"
5033606	12	1	• Cable tie	7,5 x 385
5022179	13	1	• Cable tie	Blue
5022177	14	1	• Cable tie	Red
5044130	15	2	• Dust Cover	Part is included in kit 60007907 Hose cpl., 9032177 Hose cpl.
5044127	16	2	• Quick Coupling	1/2", Part is included in kit 60007907 Hose cpl., 9032177 Hose cpl.
5013604	17	2	• Washer	Copper 21x28x2
1120011	18	2	• Adaptor	R1/2"-R3/8"
5018513	19	8	Bushing	D40 L=20
11137139	20	2	Decal	Unigrip
1123674	21	1	Warning decal	"Read manual"

© 2025 Jost