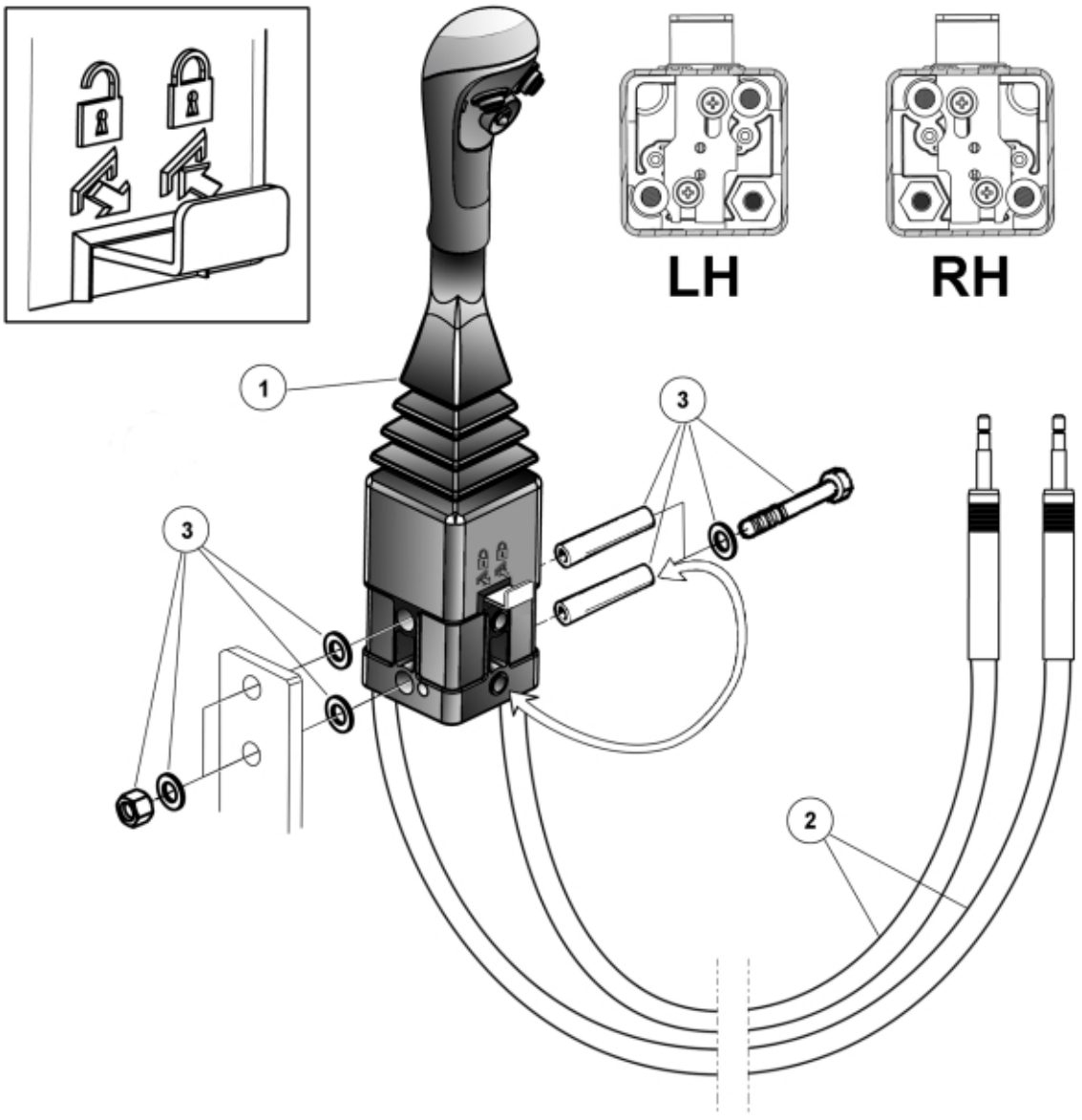



© 2025 Jost

| | |
|---|---|
| **Description** | LCS |
| **Part assemblies** | Lever kit RH (1600mm) |

| PartNo | Pos | Qty | Name | Specifications |
|---|---|---|---|---|
| 5020980 | | | Lever kit RH (1600mm) | |
| 5021037 | 1 | 1 | Control lever RH | |
| 5021028 | 2 | 2 | Control cable LCS | L=1600mm |
| 5220354 | 3 | 1 | Screw kit | Part is included in kit 5021158 Lever kit (2000mm) |


© 2025 Jost