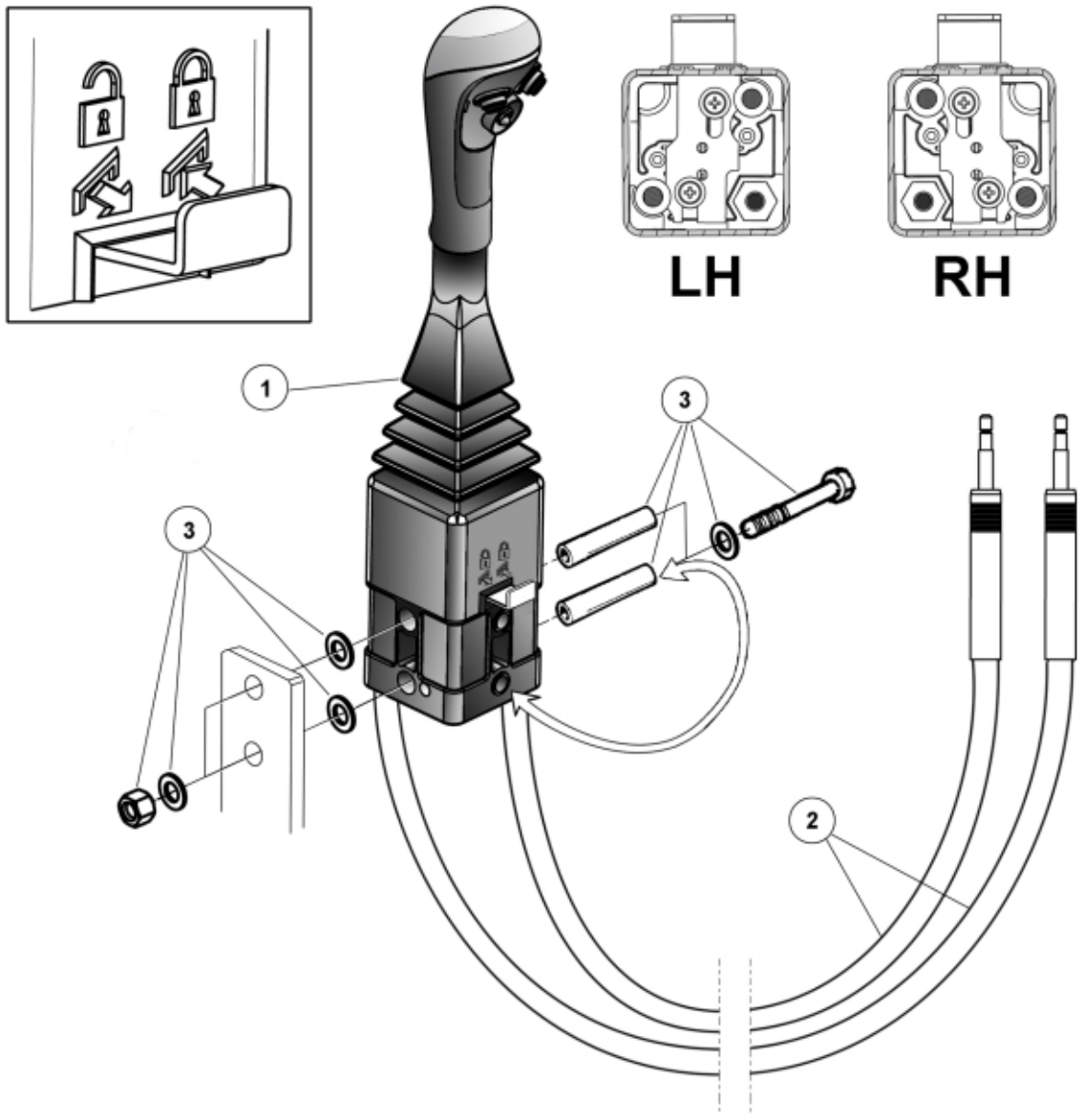

© 2025 Jost

Description	LCS
Part assemblies	Lever kit RH (1800mm)

PartNo	Pos	Qty	Name	Specifications
5021037	1	1	Control lever RH	
59035180	2	2	Control cable LCS	L=1800mm
5220354	3	1	Screw kit	Part is included in kit 5021158 Lever kit (2000mm)

© 2025 Jost