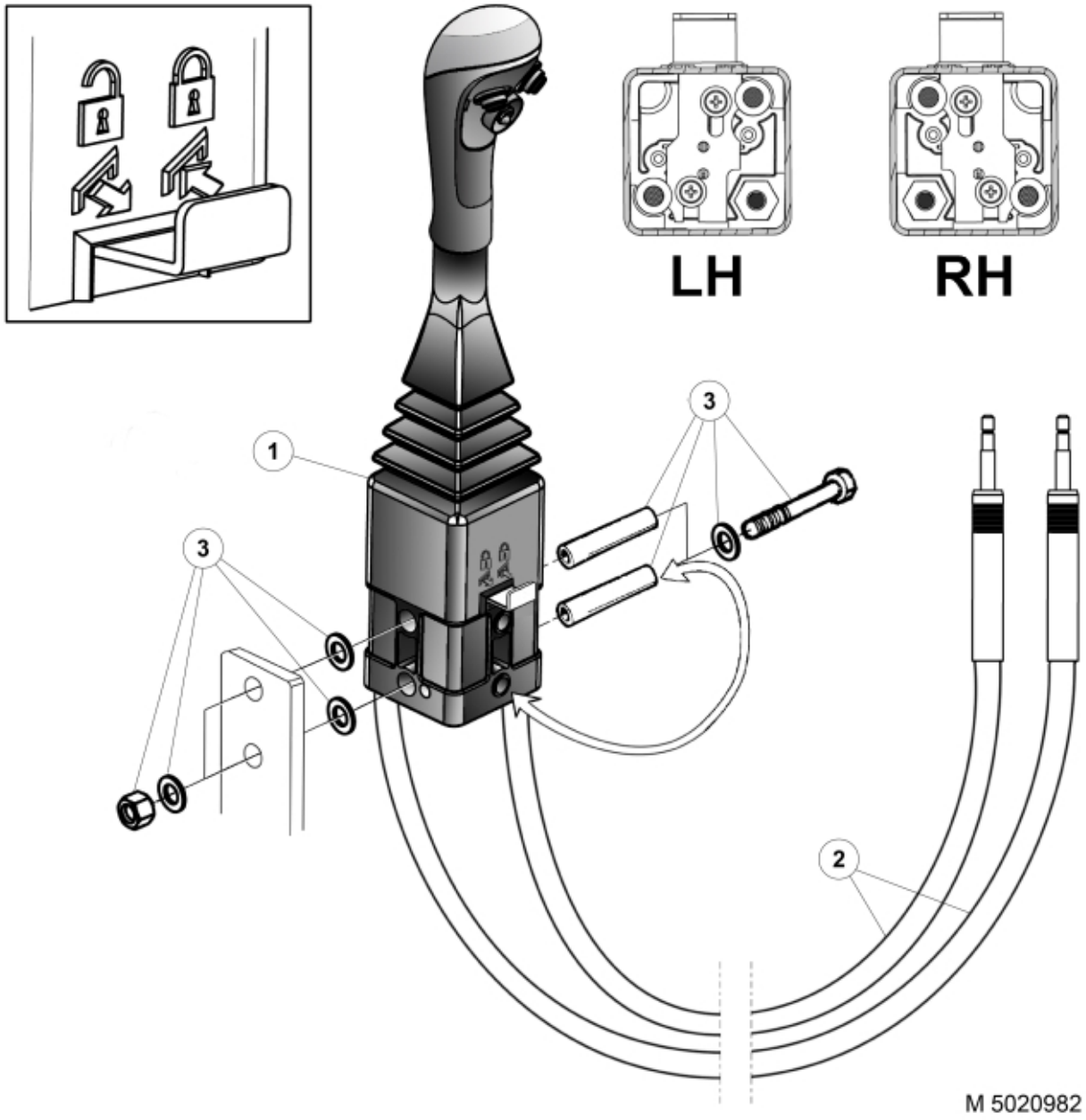

© 2025 Jost

Description	NLA. Contact Quicke
Part assemblies	Lever kit RH (2000mm)

PartNo	Pos	Qty	Name	Specifications
5021037	1	1	Control lever RH	
59035200	2	2	Control cable LCS	
5220354	3	1	Screw kit	Part is included in kit 5021158 Lever kit (2000mm)

© 2025 Jost