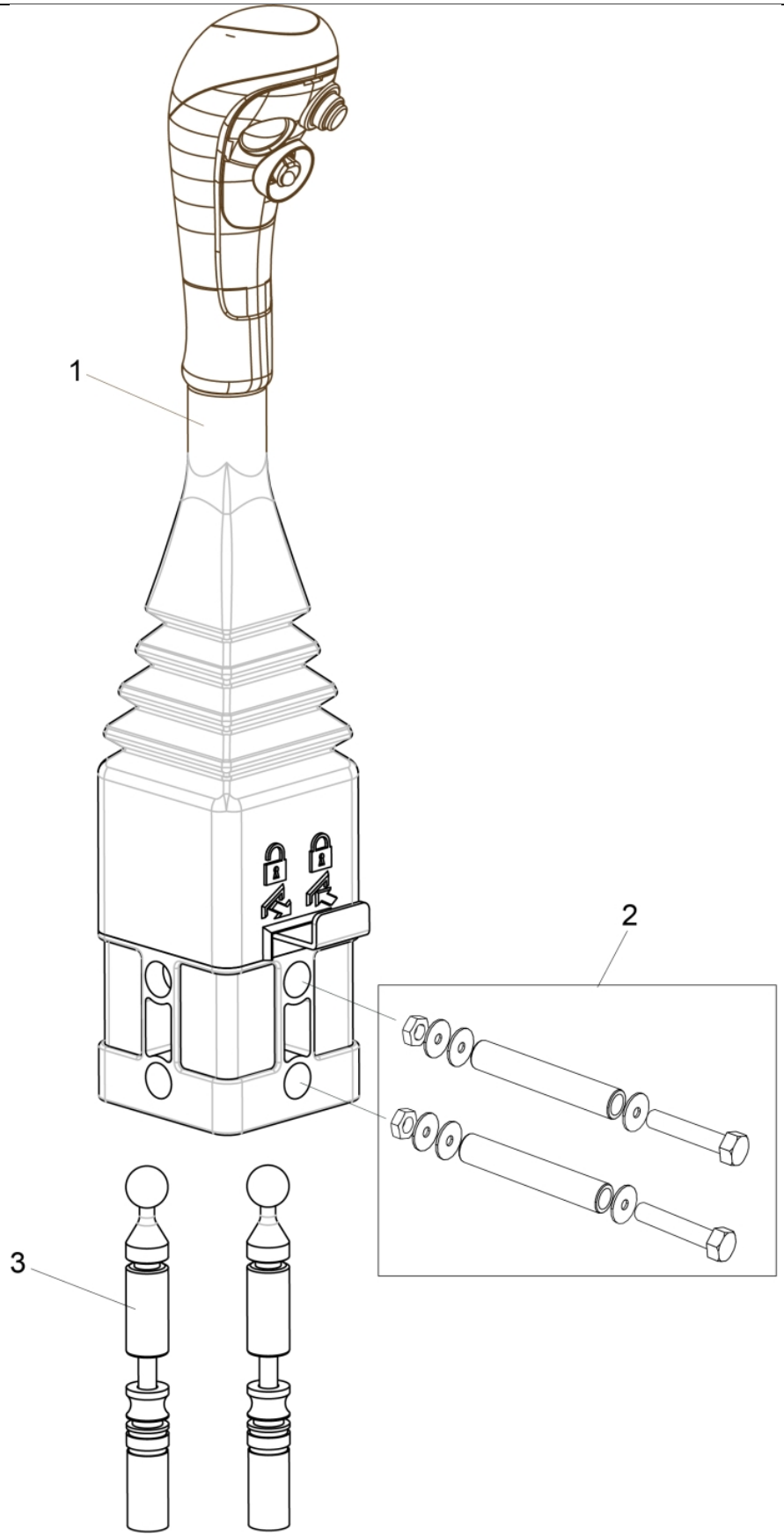

5020978a Lever kit 1+1

© 2025 Jost

Description	LCS
Part assemblies	Lever kit RH (3200mm)

PartNo	Pos	Qty	Name	Specifications
5021037	1	1	Control lever RH	
5220354	2	1	Screw kit	Part is included in kit 5021158 Lever kit (2000mm)
5021036	3	2	Control cable LCS	L=3200mm

© 2025 Jost