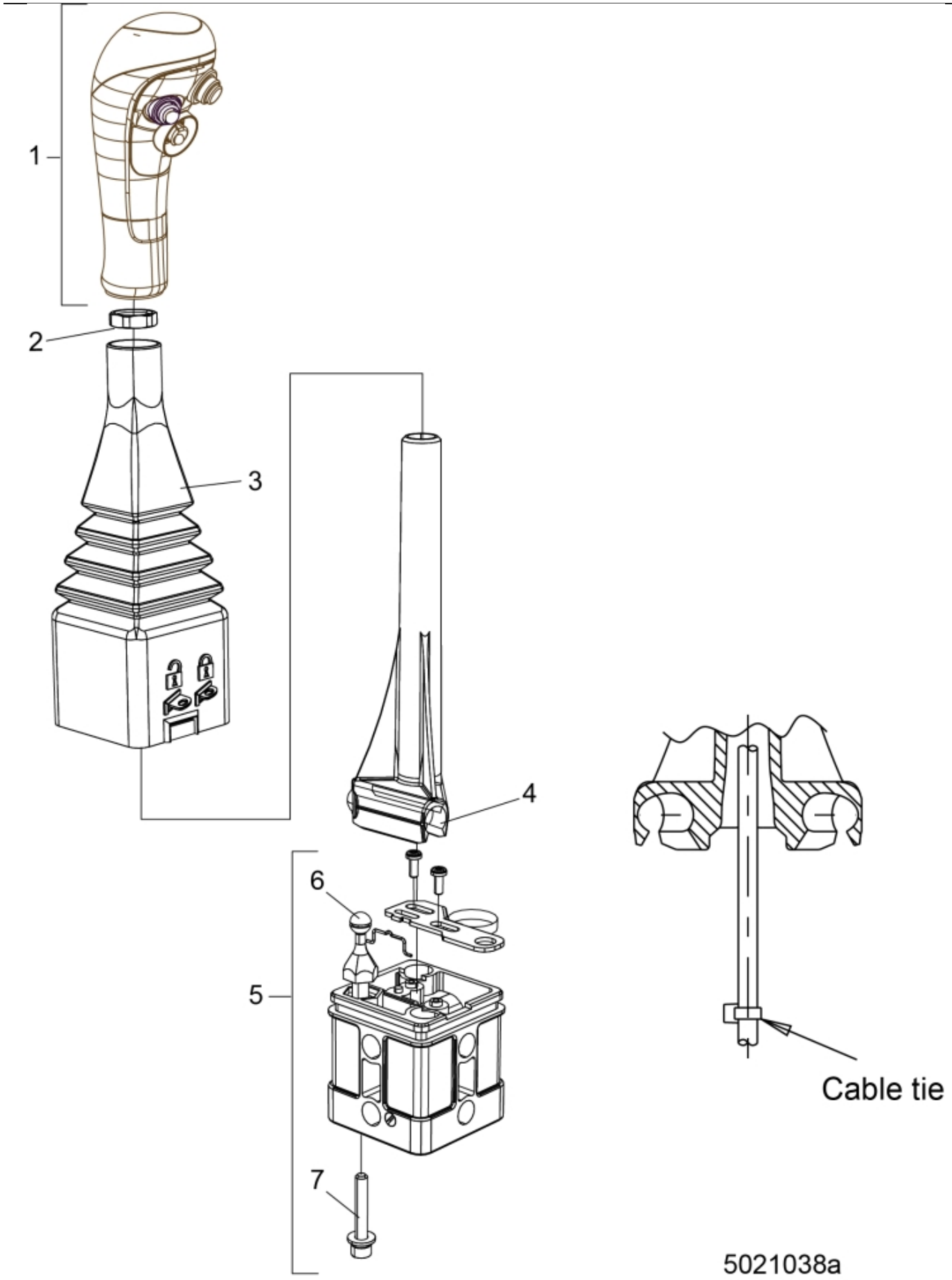

© 2025 Jost

Description	LCS
Part assemblies	Control lever LH

PartNo	Pos	Qty	Name	Specifications
5021050	1	1	Handle 2+1 LH	
4500351	2	1	• Nut	
5021043	3	1	Gaiter	Replaces 4500350
4500352	4	1	Lever	
5021044	5	1	Housing cpl.	
4500353	6	1	• Pivot	
5004030	7	1	• Screw	MC6S M6 x 45

© 2025 Jost