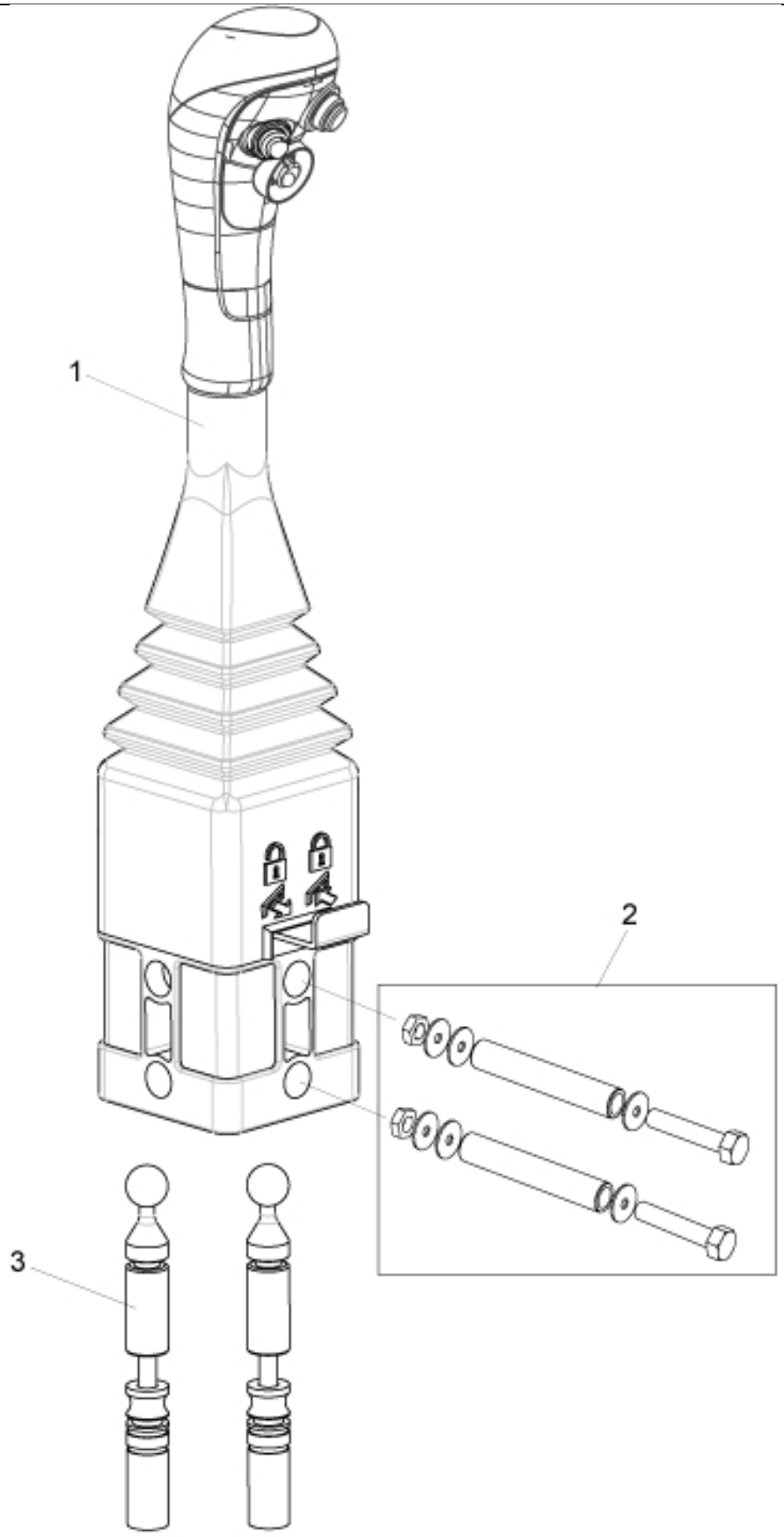

5021053a Lever kit 2+1

© 2025 Jost

Description	LCS
Part assemblies	Lever kit LH (2800mm)

PartNo	Pos	Qty	Name	Specifications
5021038	1	1	Control lever LH	
5220354	2	1	Screw kit	Part is included in kit 5021158 Lever kit (2000mm)
5021034	3	2	Control cable LCS	L=2800mm

© 2025 Jost