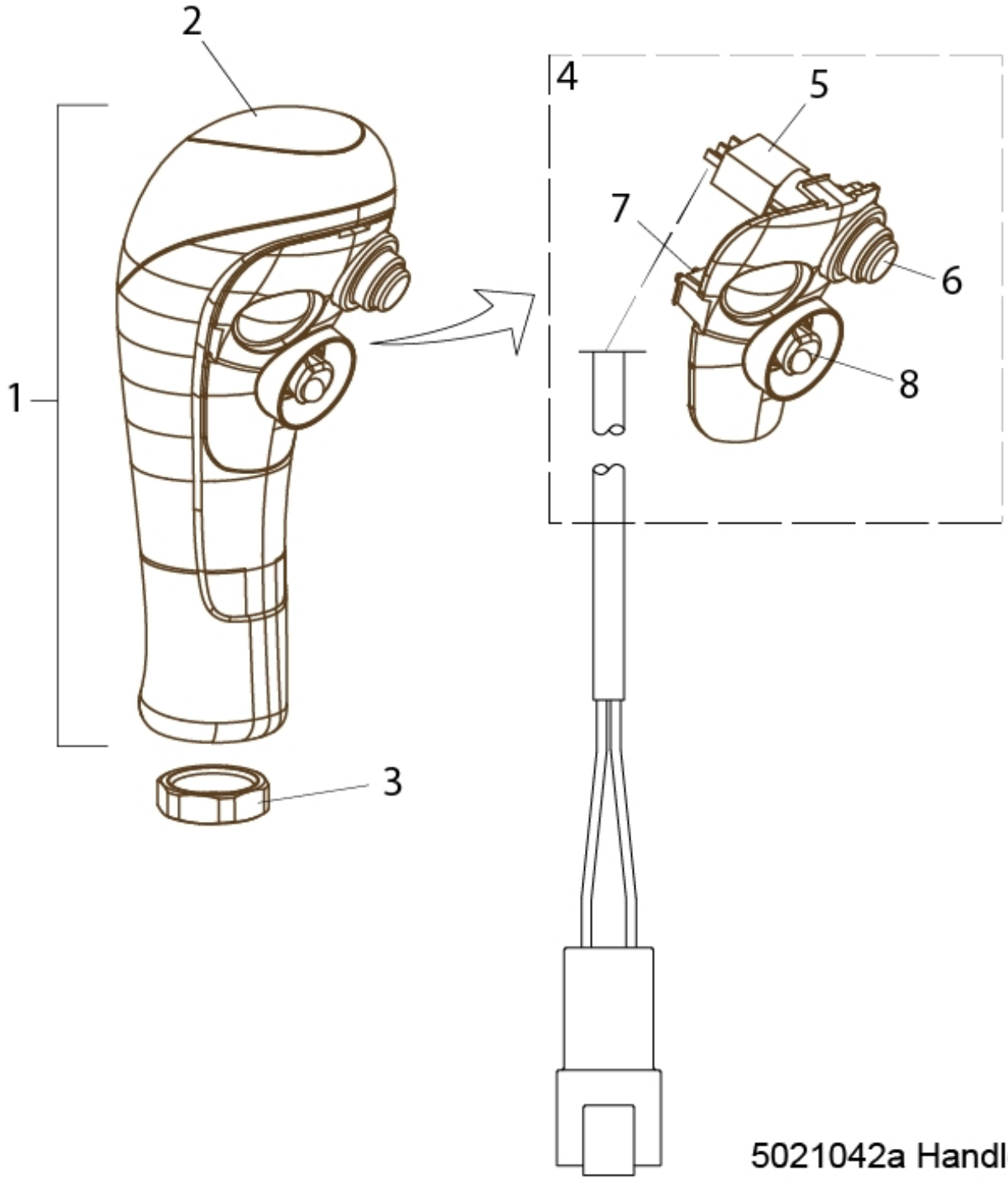

5021042a Handle 1+1 RH

© 2025 Jost

Part assemblies Handle 1+1 RH

PartNo	Pos	Qty	Name	Specifications
5021159	1	1	Handle	
5021049	2	1	• Cap RH	
4500351	3	1	Nut	
5021957	4	1	Insert	2 switches
5024365	5	1	• Switch	A 294813
5024366	6	1	• Boot	A 294814
4500354	7	1	• Switch	
4500355	8	1	• Gaitor	

© 2025 Jost