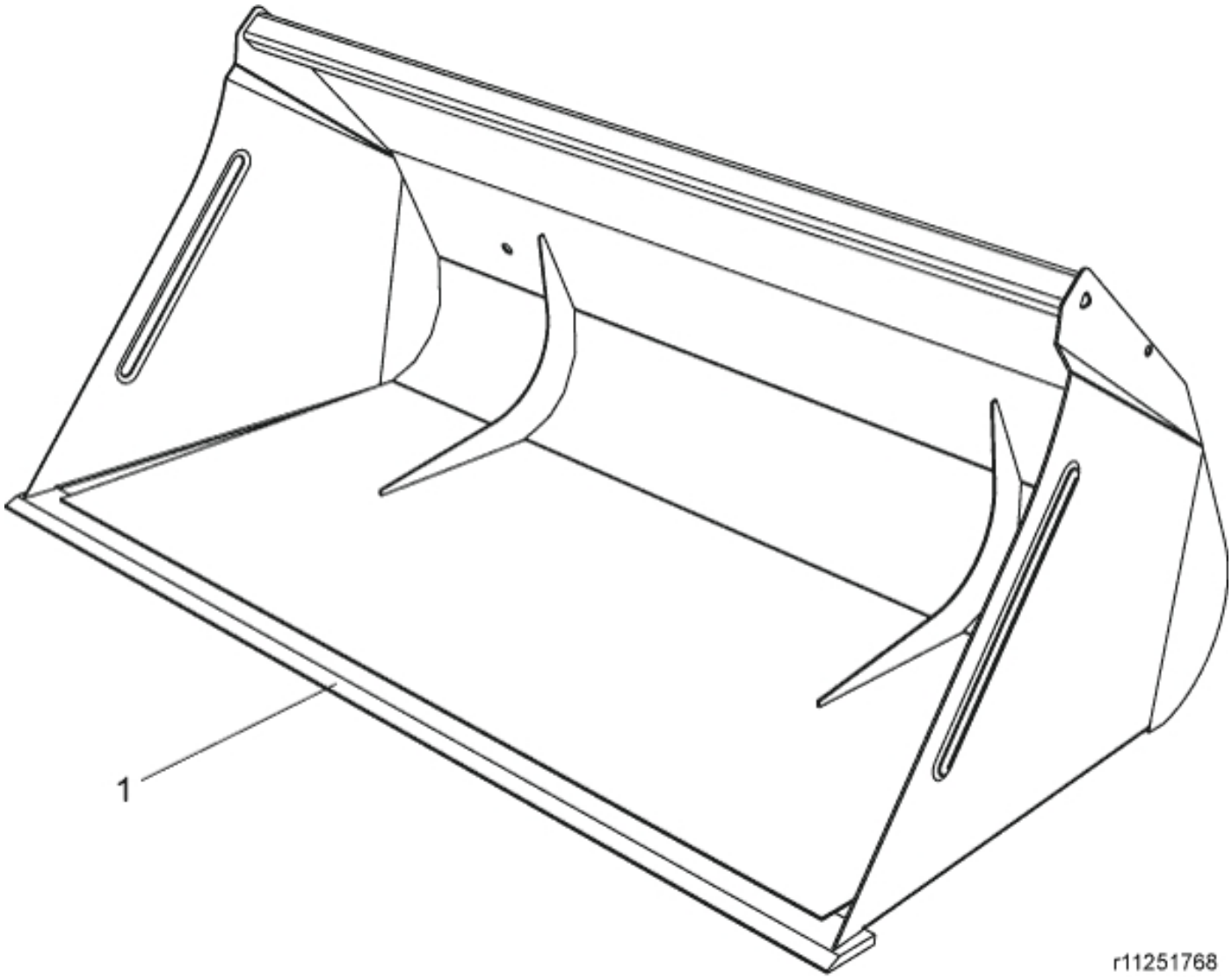

© 2025 Jost

Part assemblies	Bucket 220LV SMS
Specification	Year From: 11/1/2009 12:00:00 AM
	Year To: 10/31/2020 12:00:00 AM

PartNo	Pos	Qty	Name	Specifications
11260041	1	1	Cutting edge	
5022119		2	Plug	

© 2025 Jost