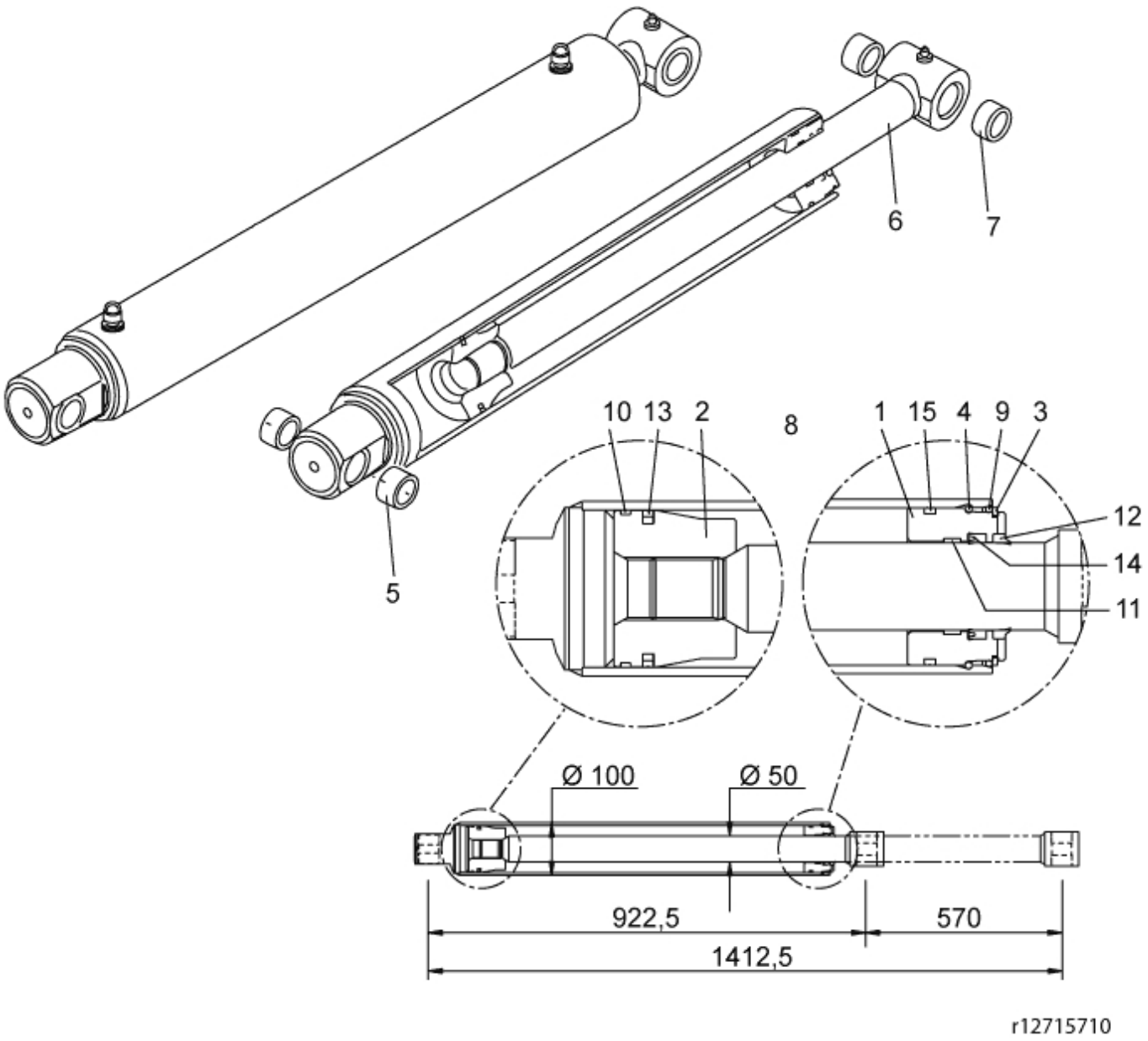

© 2025 Jost

Description	100/50
Part assemblies	Tilt Cylinder
Specification	Specification: Glossy Black
	Serial number from: 7298824

PartNo	Pos	Qty	Name	Specifications
12710011	1	1 PCS	Bearing	
12710012	2	1	Piston	
5016624	3	1	Retaining ring	
5016677	4	1	Retaining ring	
5018514	5	2	Bushing	D35 L=20
12715723	6	1	Piston rod cpl.	
5018513	7	2	• Bushing	D40 L=20
5033710	8	1	Seal kit	
5037265	9	1	• O-ring	91,6 x 3,53
5040018	10	1	• Guide ring	100/95 x 5,5
5040011	11	1	• Guide ring	50/55 x 9,7
5038104	12	1	• Wiper	50/60 x 7/10
5040028	13	1	• Piston seal	100/84,5 x 6,3
5038256	14	1	• Seal	50/60 x 10
5039008	15	1	• Seal kit	100 x 93,8 x 6,9

© 2025 Jost