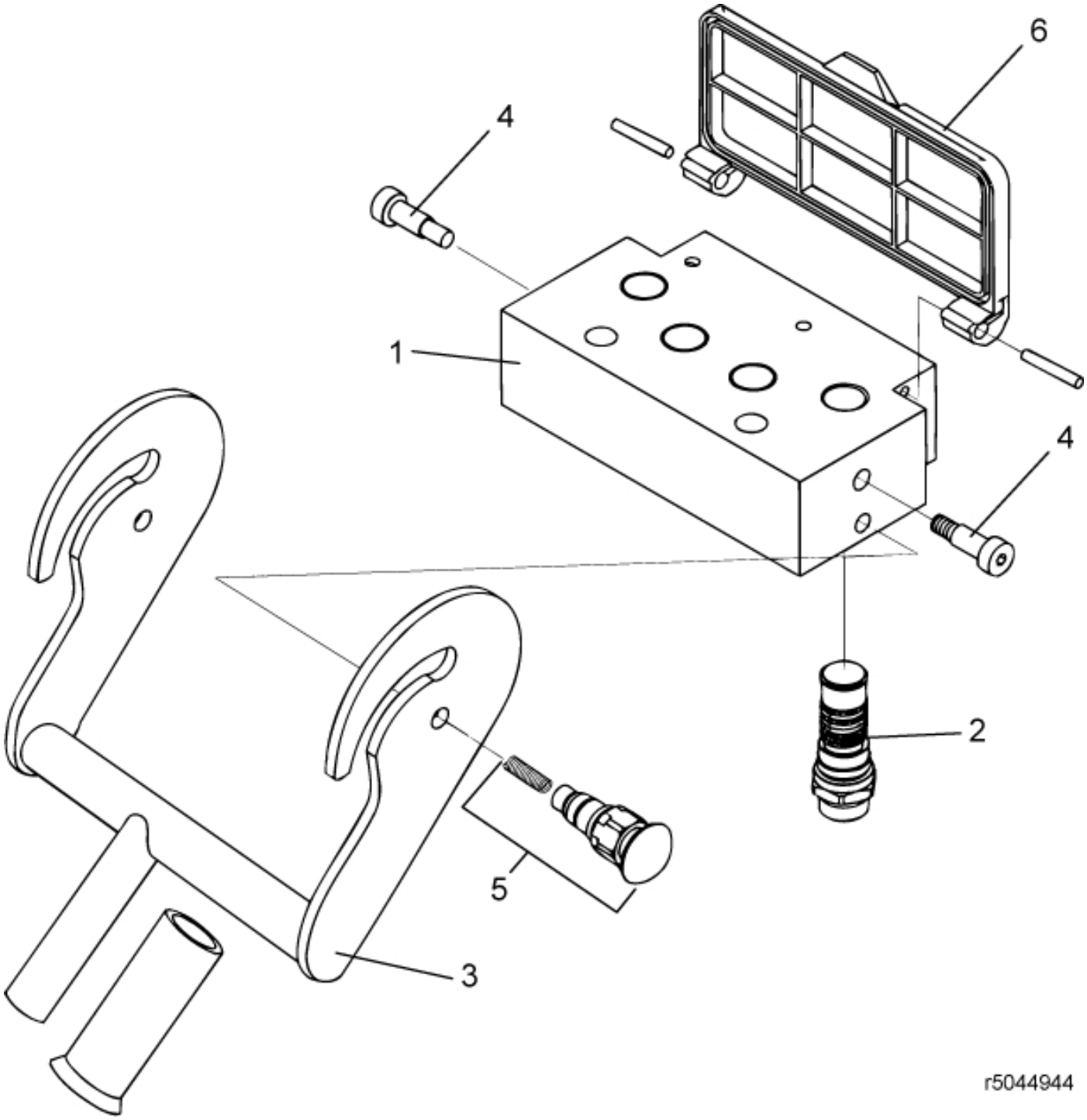

© 2025 Jost

Description	4 port QC
Part assemblies	Multi coupling, lower part

PartNo	Pos	Qty	Name	Specifications
5044905	1	1	Lower part HQ 4	
5028064	2	4	Coupling JIC	
5044904	3	1	Lever	
10301547	4	1	Screw kit	VP4
4501199	5	1	Safety kit	
5044907	6	1	Cap	

© 2025 Jost