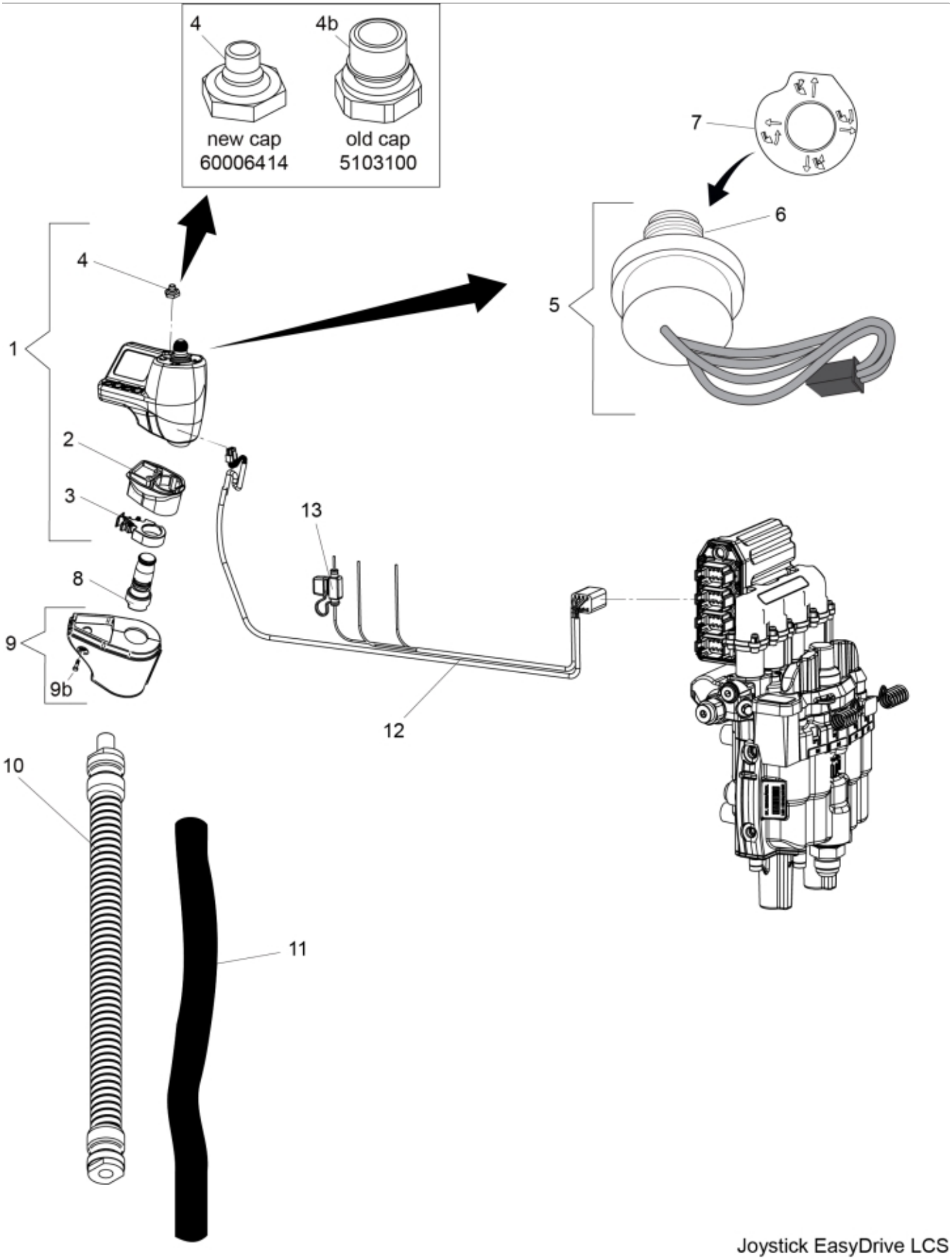

Joystick EasyDrive LCS

© 2025 Jost

Part assemblies Joystick EasyDrive LCS

PartNo	Pos	Qty	Name	Specifications
4501087	1	1	Joystick ElectroDrive Qs	Replaces 60006437/60006439., - Note! Electrojoystick LCS replacement kit PN 4501279 is NOT compatible with loaders equipped with Live3 option (independent 3rd service). Please contact Quicke.
5103086	2	1	• Bellows	
5103087	3	1	• Cable protection	
60006414	4	1	• Cap	
5103100	4b	1	Cap	Use for joysticks manufactured before 2015 (p/n 5101130/5101131. Replaces 5103088
4501268	5	1	• Thumb joystick	Boot included. Replaces 5103116
4501267	6	1	•• Rubber boot	Replaces 60004085.
5103118	7	1	• Decal	
5103055	8	1	Pole clp.	
5103056	9	1	Cover	
5006015	9b	1	• Screw	Torx T8x12
5103058	10	1	Gooseneck	150mm
5103057	10	1	Gooseneck	300mm
5103083	10	1	Gooseneck	350mm
5103053	11	1	Braided sleeving	
5102118	12	1	Cable cpl.	
5103089	13	1	Mini fuse 15A	

© 2025 Jost