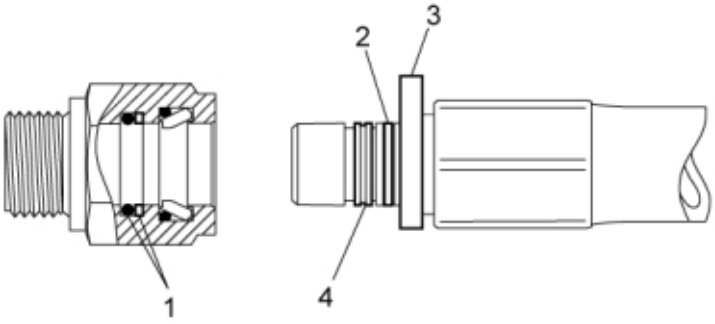

Pos.	Quantity.
1	1 (10 pcs)
2	1 (10 pcs)
3	1 (10 pcs)
4	1 (10 pcs)

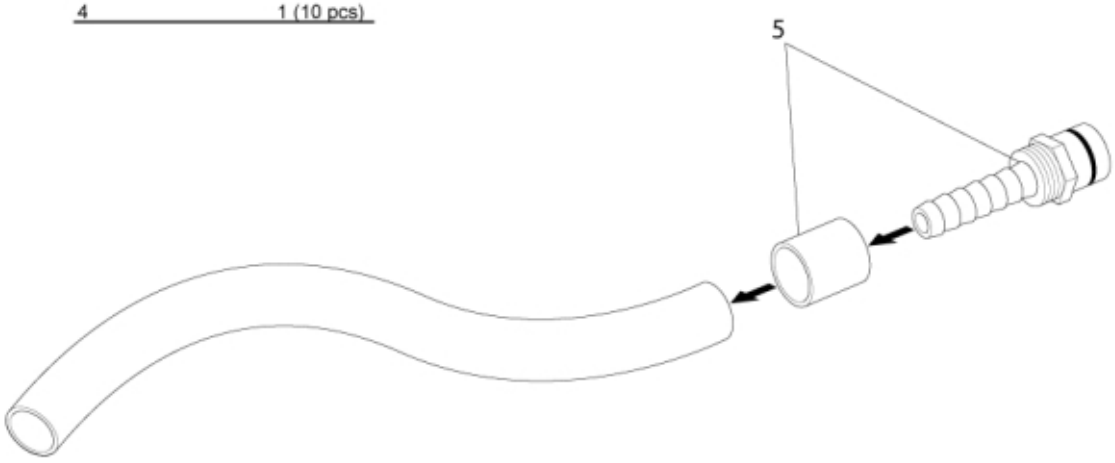

Pluginsealkit1

© 2025 Jost

Part assemblies WEO Plug-in, Seal kits & Crimp fittings

PartNo	Pos	Qty	Name	Specifications
4500386	1	1	Seal kit	WEO 1/4" 10 kits/bag
4500387	1	1	Seal kit	WEO 3/8" 10 kits/bag
4500388	1	1	Seal kit	WEO 1/2" 10 kits/bag
4500383	2	1 PCS	O-ring kit	1/4" 10 pcs/bag
4500384	2	1 PCS	O-ring kit	3/8" 10 pcs/bag
4500385	2	1 PCS	O-ring kit	1/2" 10 pcs/bag
5028058	3	1 PCS	Assembly stop	1/4" 10 pcs/bag
5028009	3	1 PCS	Assembly stop	3/8" 10 pcs/bag
5028010	3	1 PCS	Assembly stop	1/2" 10 pcs/bag
5028059	4	1 PCS	Release ring	1/4" 10 pcs/bag
5028011	4	1 PCS	Release ring	3/8" 10 pcs/bag
5028012	4	1 PCS	Release ring	1/2" 10 pcs/bag
4500379	5	1 PCS	Crimp fitting	WEO 1/4"-1/4" Hose
4500380	5	1 PCS	Crimp fitting	WEO 3/8"-3/8" Hose
4500381	5	1 PCS	Crimp fitting	WEO 1/2"-1/2" Hose
4500382	5	1 PCS	Crimp fitting	WEO 1/2"-3/8" Hose

© 2025 Jost