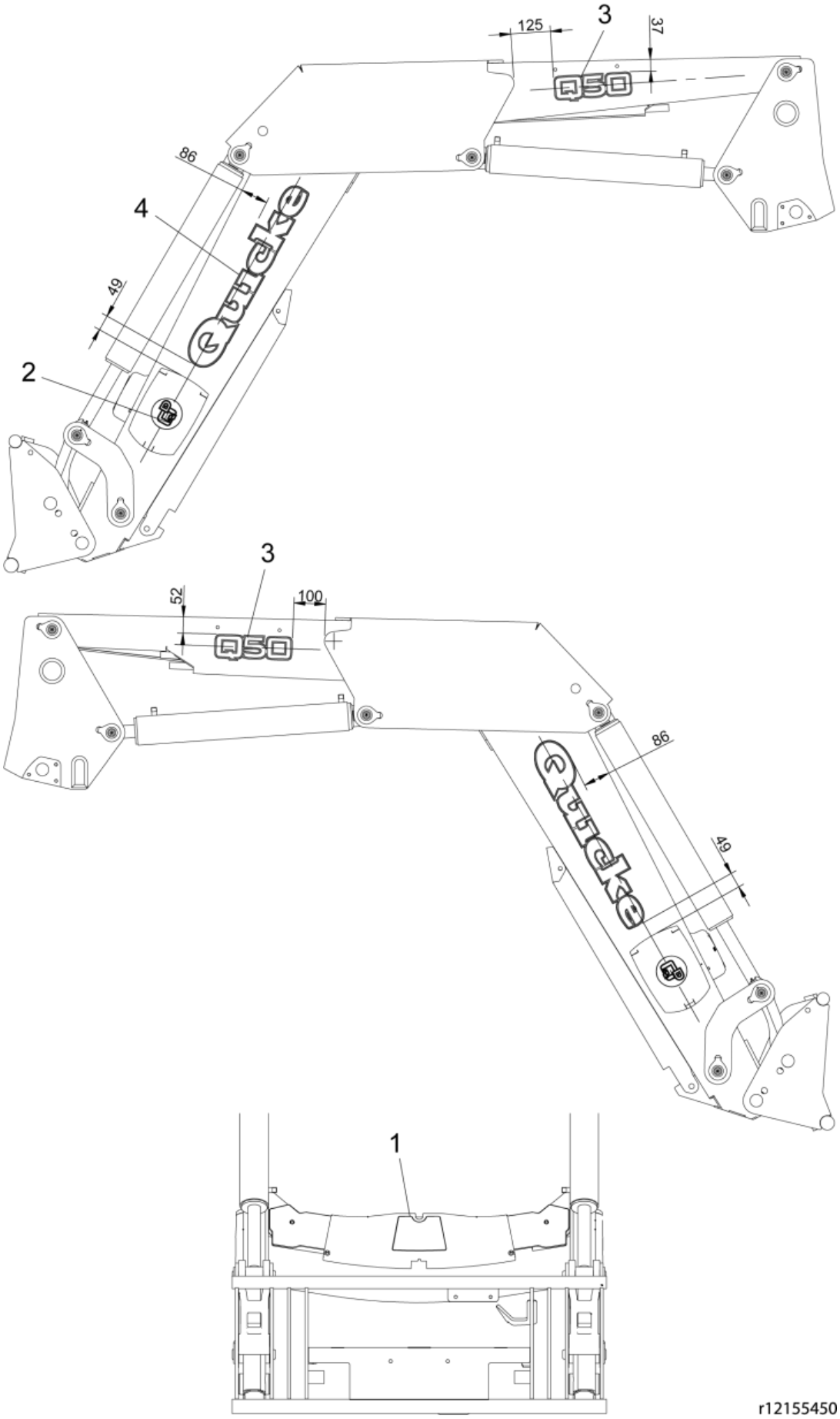

© 2021 Ålö

Part assemblies Decal kit Q50 S/N - 7305476

PartNo	Pos	Qty	Name	Specification
11133835	1	1 PCS	QD	
11133834	2	2 PCS	QD	
11133826	3	2 PCS	Q50	
11133820	4	2 PCS	Quicke	

© 2021 Ålö