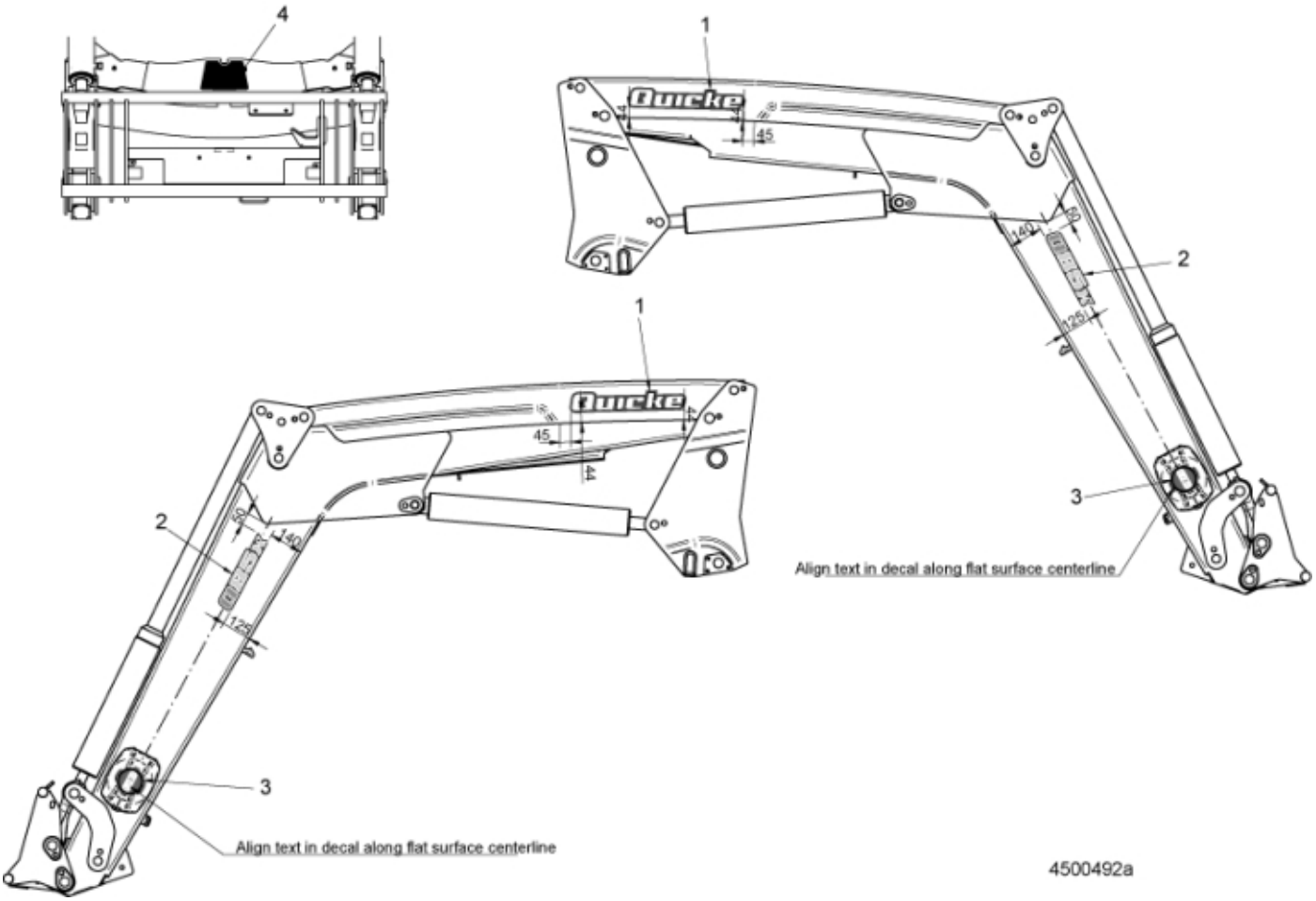
4
1
45
140
50
2
125
3
Align text in decal along flat surface centerline
1
45
44
2
50
140
125
3
Align text in decal along flat surface centerline
4500492a

© 2025 Jost

Description	MK2
Part assemblies	Decal kit Q85x

PartNo	Pos	Qty	Name	Specifications
11135105	1	2 PCS	Quicke	
11135048	2	2 PCS	Q85x	
11135040	3	2	Decal, Circular	QD
11135041	4	1 PCS	QD	

© 2025 Jost