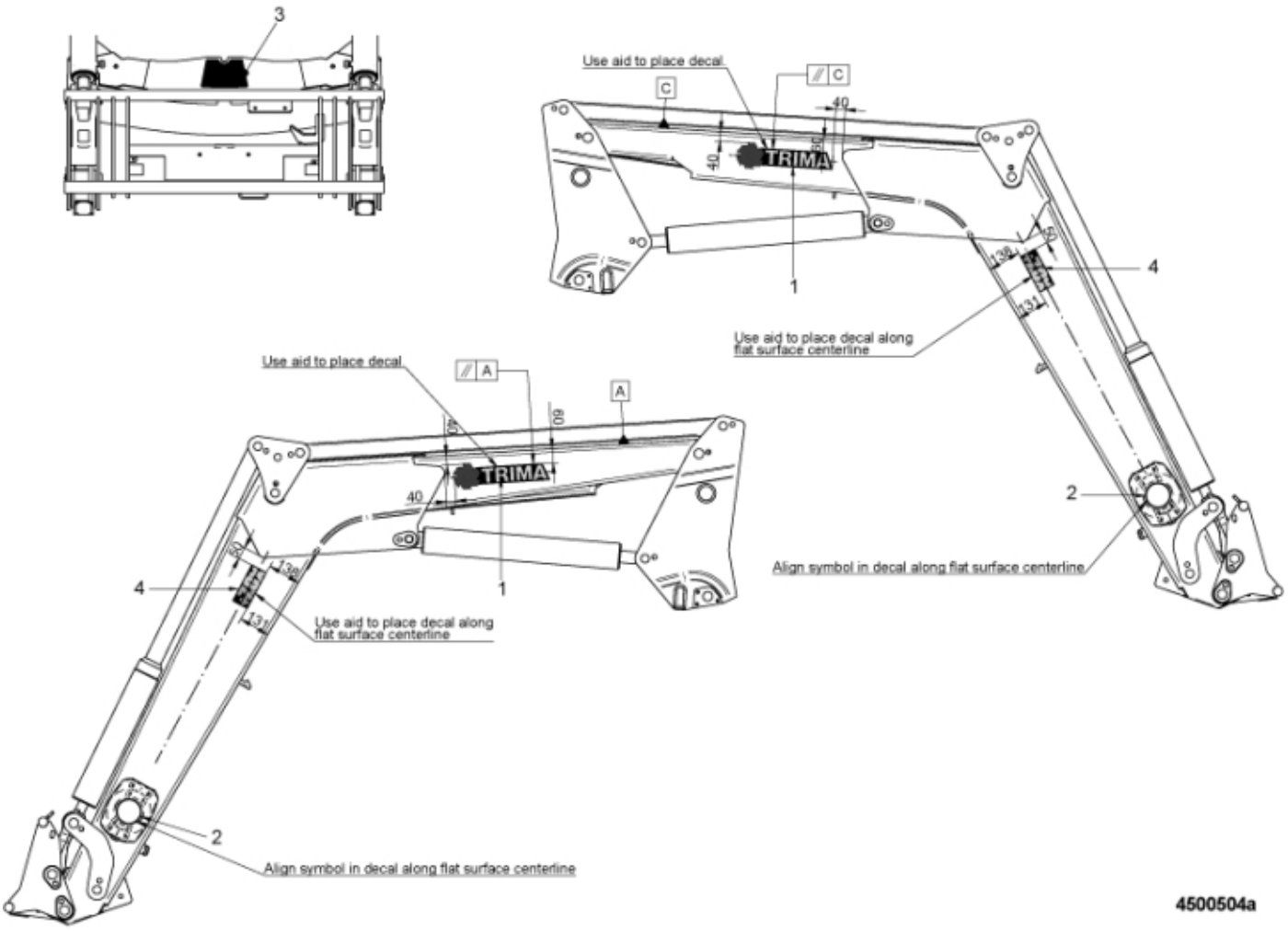
3
Use aid to place decal
C
40
40
TRIMA
1
4
Use aid to place decal along flat surface centerline
2
Align symbol in decal along flat surface centerline
Use aid to place decal
A
60
40
TRIMA
1
4
Use aid to place decal along flat surface centerline
2
Align symbol in decal along flat surface centerline
4500504a

© 2025 Jost

Description	MK2
Part assemblies	Decal kit +7.0x

PartNo	Pos	Qty	Name	Specifications
11135054	1	2 PCS	Decal, Brand	
11135055	2	2 PCS	Decal, Circular	Trima
11135056	3	1 PCS	Trapezoid decal	
11135063	4	2 PCS	+7.0x	

© 2025 Jost