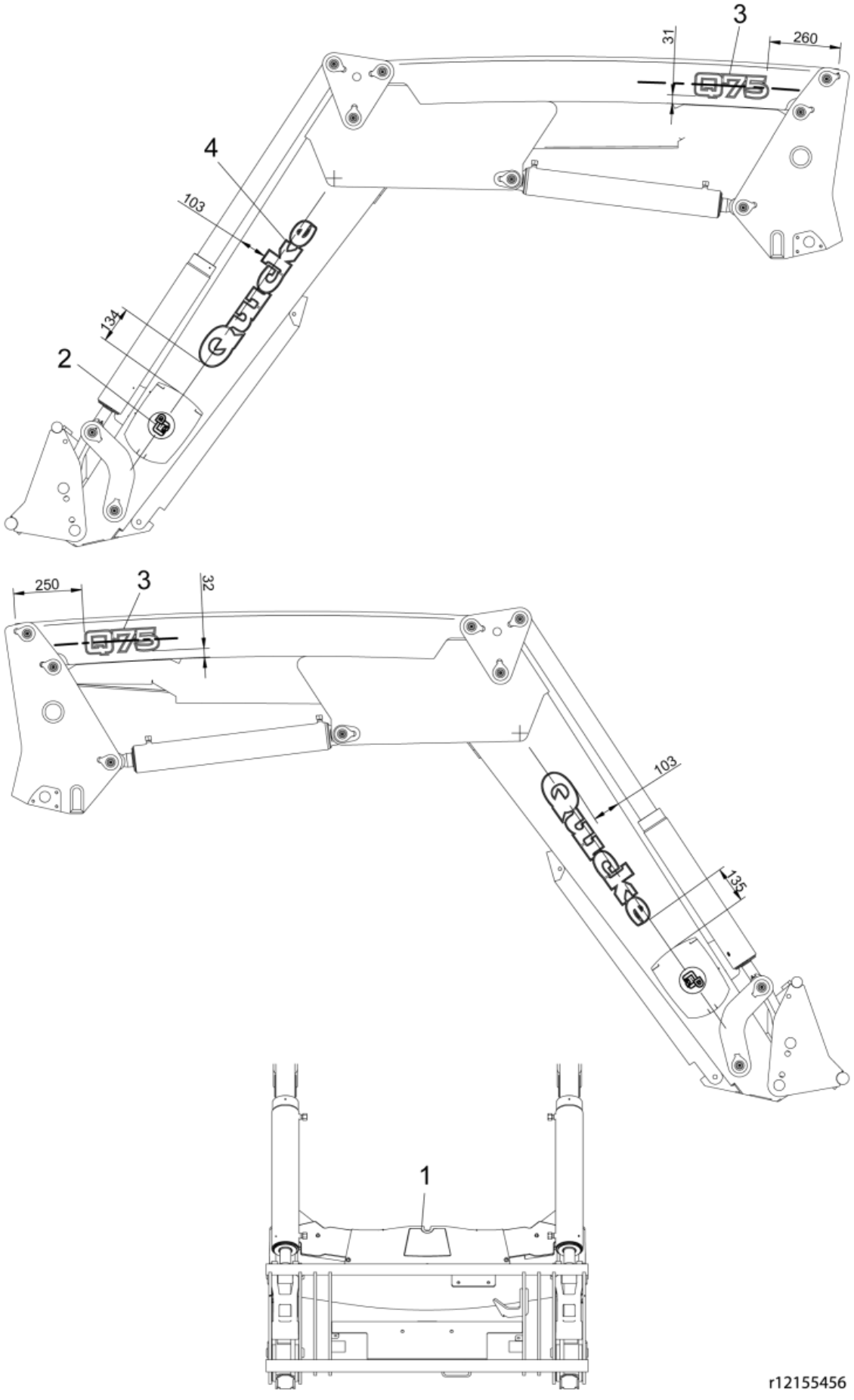
3
31
260
Q75
4
103
Quicke
134
2
250
3
32
Q75
103
Quicke
135
1
r12155456

© 2025 Jost

Part assemblies Decal kit Q75 S/N - 7305476

PartNo	Pos	Qty	Name	Specifications
11133835	1	1 PCS	QD	
11133834	2	2 PCS	QD	
11133832	3	2 PCS	Q75	
11133820	4	2 PCS	Quicke	

© 2025 Jost