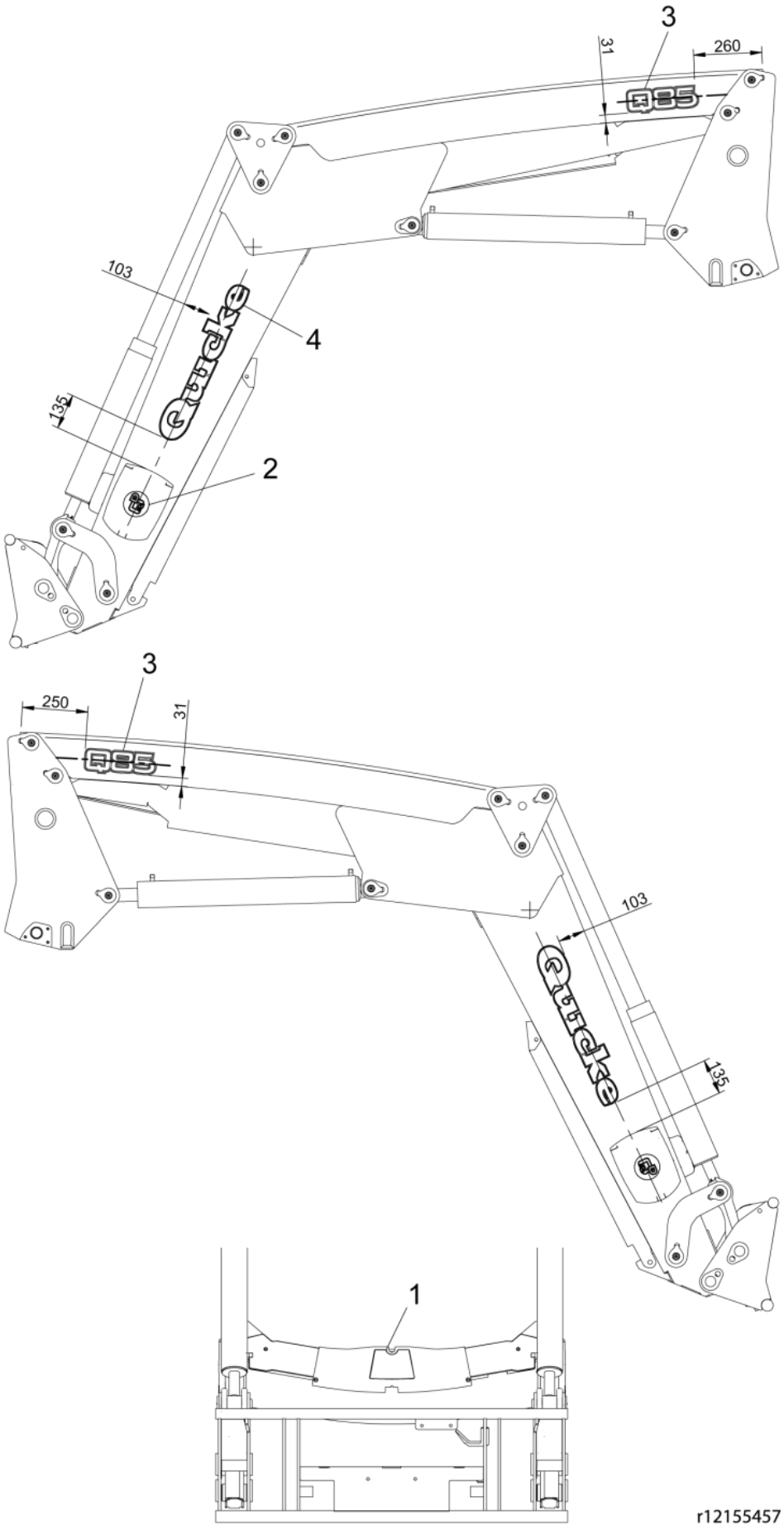



© 2025 Jost

| | |
|---|---|
| **Part assemblies** | Decal kit Q85 |

| PartNo | Pos | Qty | Name | Specifications |
|---|---|---|---|---|
| 11133835 | 1 | 1 PCS | QD | |
| 11133834 | 2 | 2 PCS | QD | |
| 11133833 | 3 | 2 PCS | Q85 | |
| 11133820 | 4 | 2 PCS | Quicke | |


© 2025 Jost