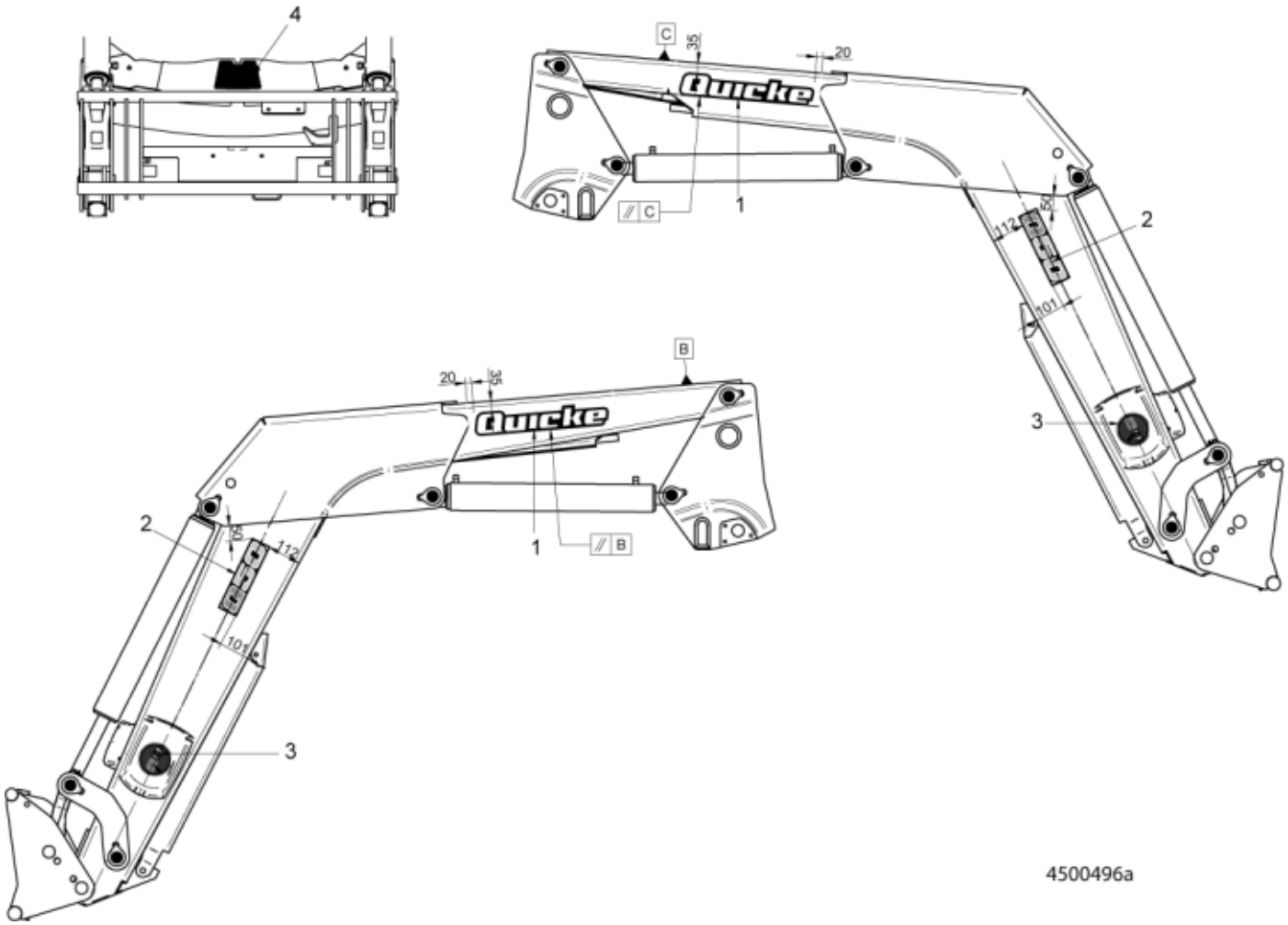

© 2025 Jost

Description	MK2
Part assemblies	Decal kit Q50 S/N 7305477 -

PartNo	Pos	Qty	Name	Specifications
11135039	1	2 PCS	Quicke	
11135052	2	2 PCS	Q50	
11135040	3	2	Decal, Circular	QD
11135041	4	1 PCS	QD	

© 2025 Jost