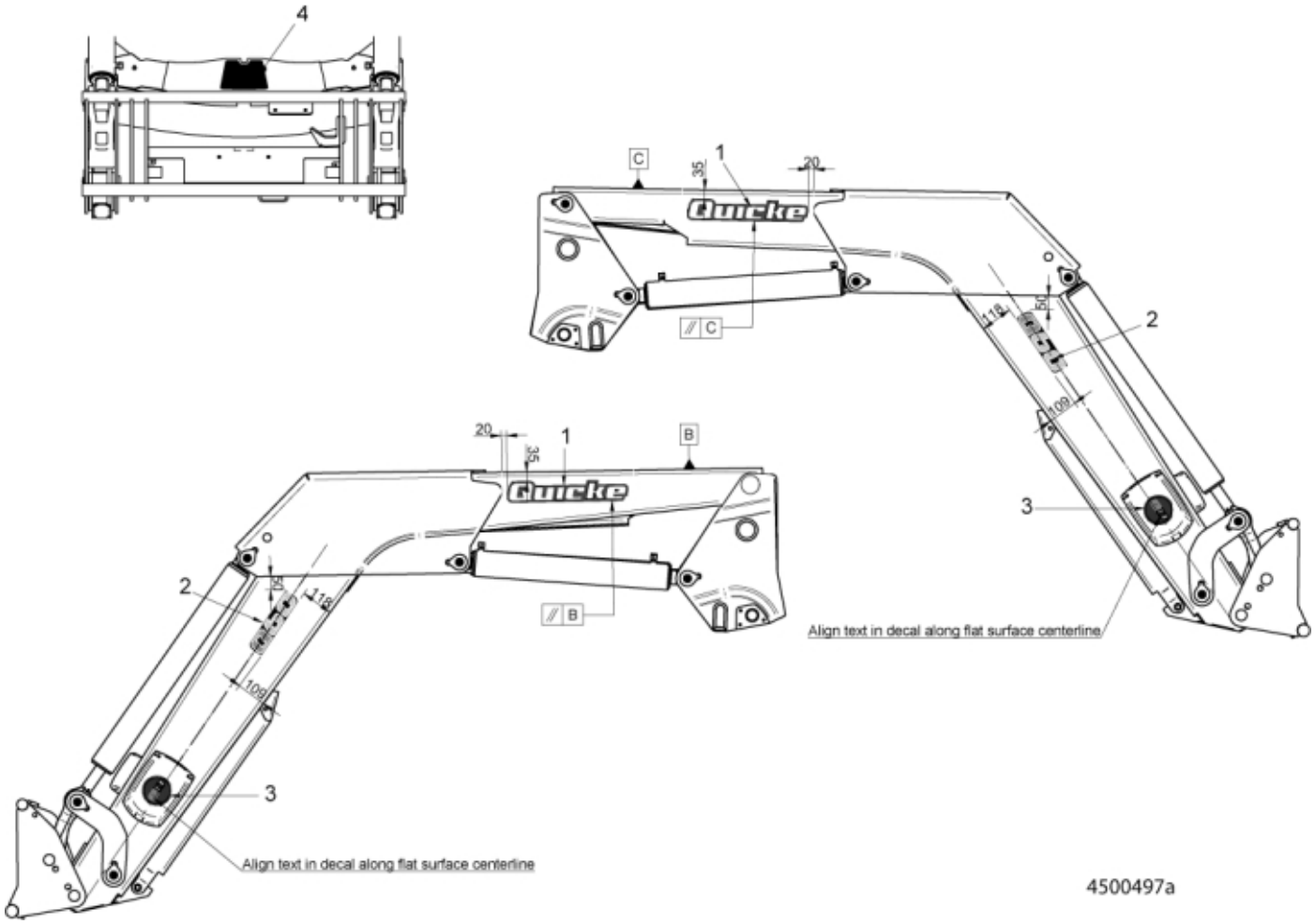
4
C
35
1
20
C
118
50
2
109
3
Align text in decal along flat surface centerline
20
35
1
B
2
50
118
109
B
3
Align text in decal along flat surface centerline
4500497a

© 2025 Jost

Description	MK2
Part assemblies	Decal kit Q60 S/N 7305477 -

PartNo	Pos	Qty	Name	Specifications
11135039	1	2 PCS	Quicke	
11135053	2	2 PCS	Q60	
11135040	3	2	Decal, Circular	QD
11135041	4	1 PCS	QD	

© 2025 Jost