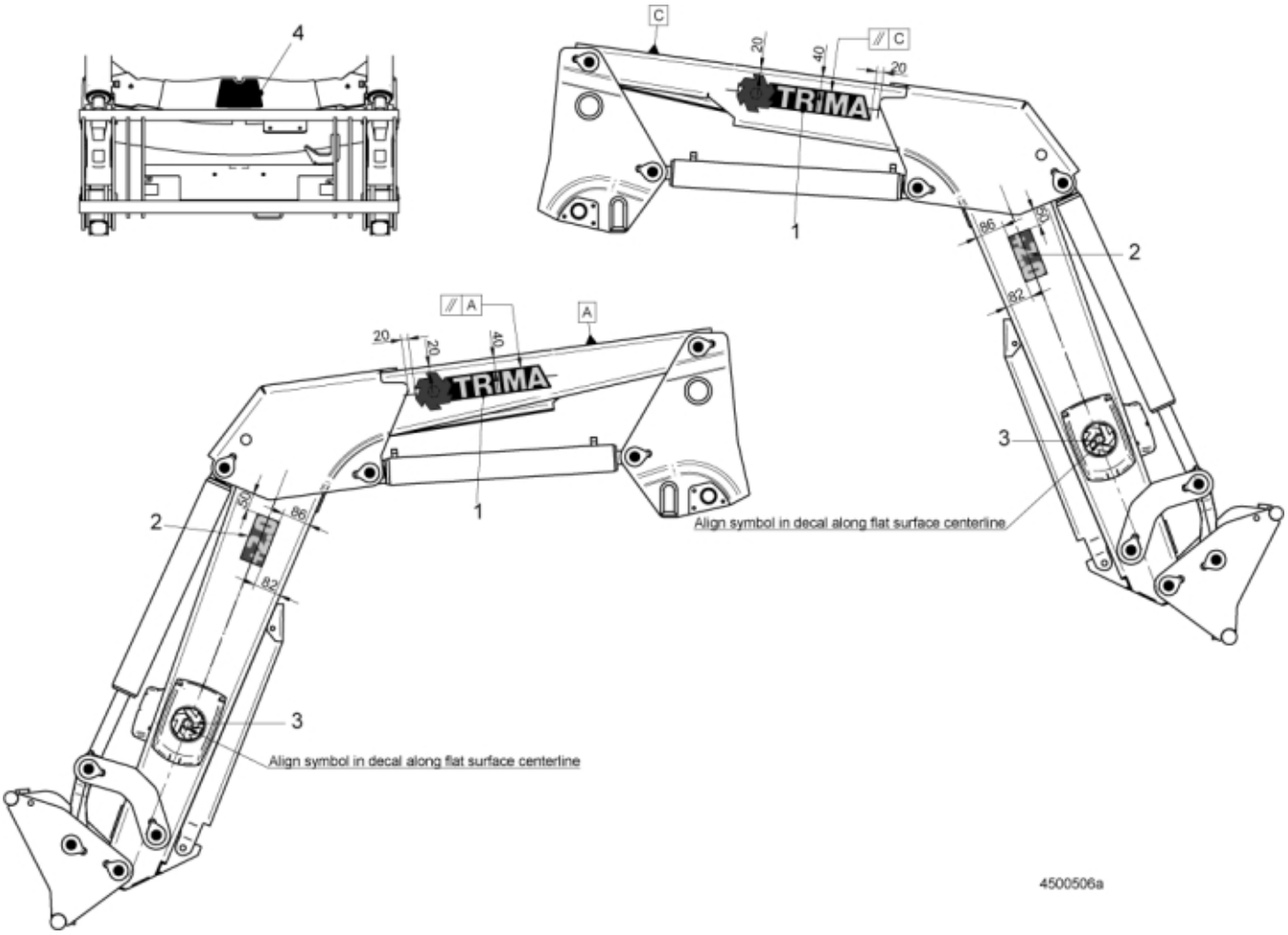
4
C
20
40
// C
20
TRIMA
1
2
86
25
82
3
Align symbol in decal along flat surface centerline
// A
A
20
24
40
TRIMA
1
2
25
86
82
3
Align symbol in decal along flat surface centerline
4500506a

© 2025 Jost

Description	MK2
Part assemblies	Decal kit +2.0 S/N 7305477 -

PartNo	Pos	Qty	Name	Specifications
11135054	1	2 PCS	Decal, Brand	
11135065	2	2 PCS	+2.0	
11135055	3	2 PCS	Decal, Circular	Trima
11135056	4	1 PCS	Trapezoid decal	

© 2025 Jost