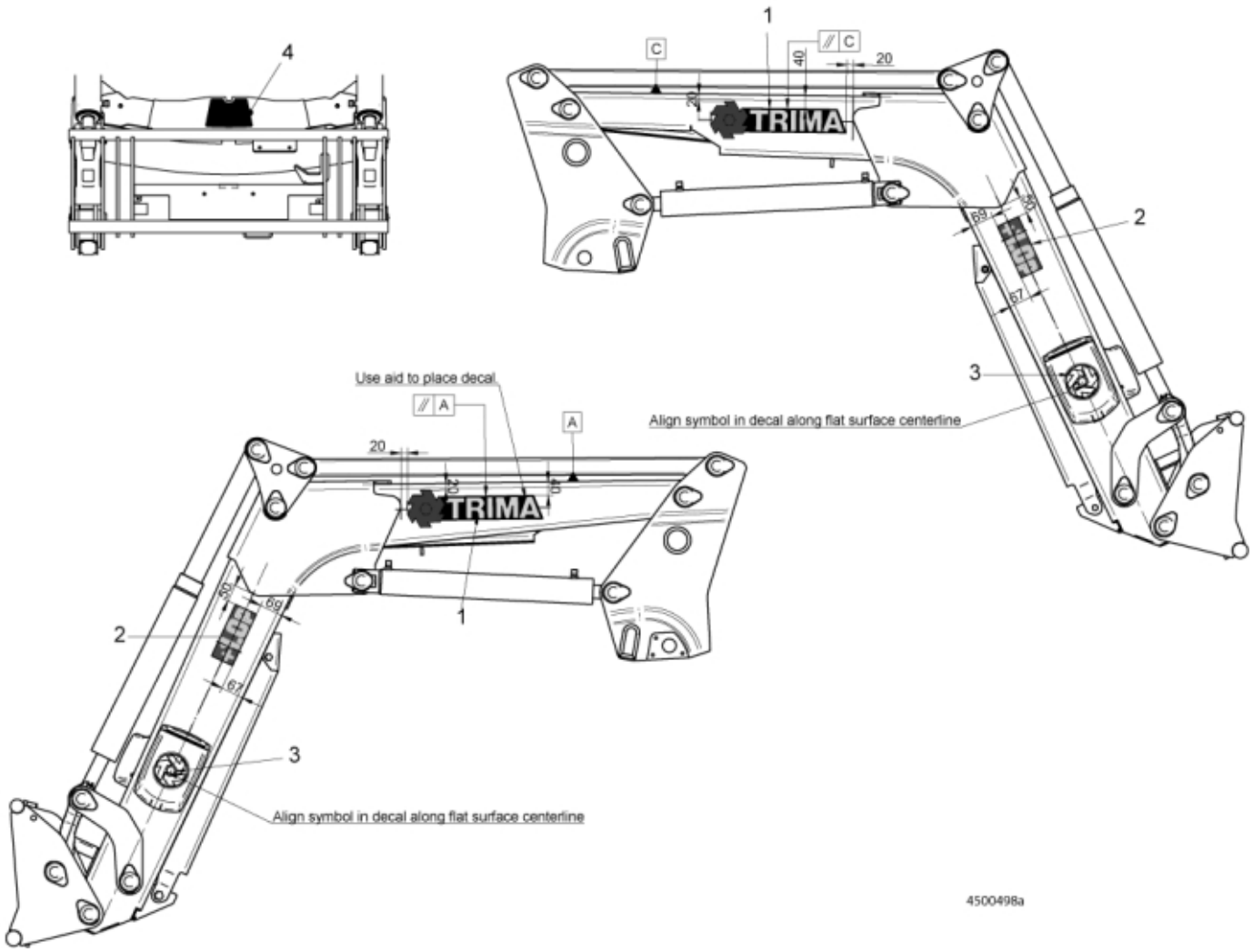
4
1
C
C
40
20
TRIMA
2
69
67
3
Align symbol in decal along flat surface centerline
Use aid to place decal
A
A
20
TRIMA
1
2
69
67
3
Align symbol in decal along flat surface centerline
4500498a

© 2025 Jost

Description	MK2
Part assemblies	Decal kit +1.0P S/N 7305477 -

PartNo	Pos	Qty	Name	Specifications
11135054	1	2 PCS	Decal, Brand	
11135057	2	2 PCS	+1.0P	
11135055	3	2 PCS	Decal, Circular	Trima
11135056	4	1 PCS	Trapezoid decal	

© 2025 Jost