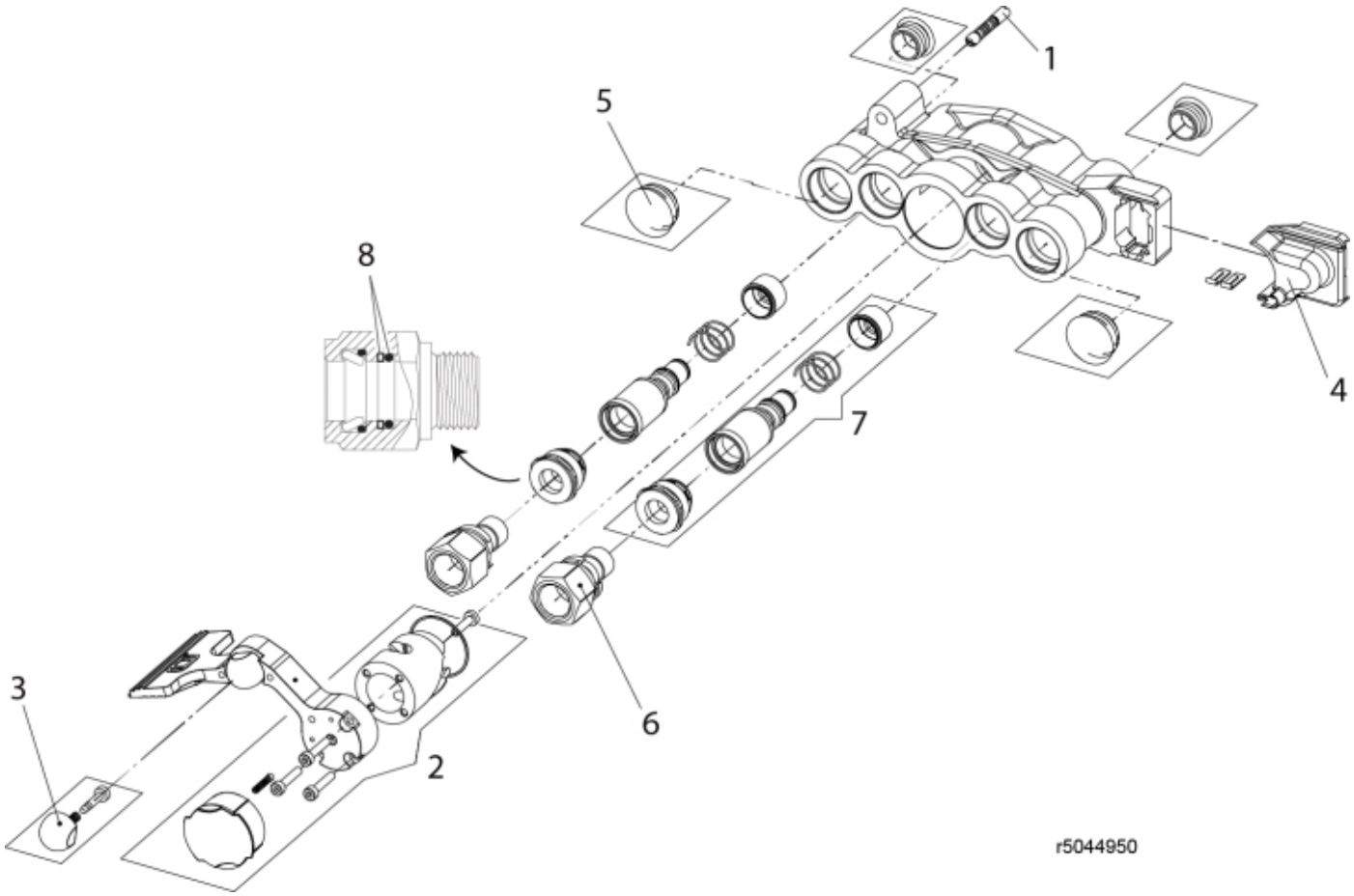

© 2025 Jost

Part assemblies	Multi coupling MC2
Specification	Specification: MC-2

PartNo	Pos	Qty	Name	Specifications
5044950		1	Multi coupling MC2	MC-2
5044964	1	1	• Pin	
60004357	2	1	• Lever set	replaces 5044965
5044967	3	1	•• Locking knob	
5033966	4	1	• Cover	
5044966	5	1	• Plug kit	4 pcs
11120600	6	2	• Plug-in	Weo 1/2" BSP 1/2"
5044968	7	2	• Coupling socket	
4500388	8	1	Seal kit	WEO 1/2" 10 kits/bag

© 2025 Jost