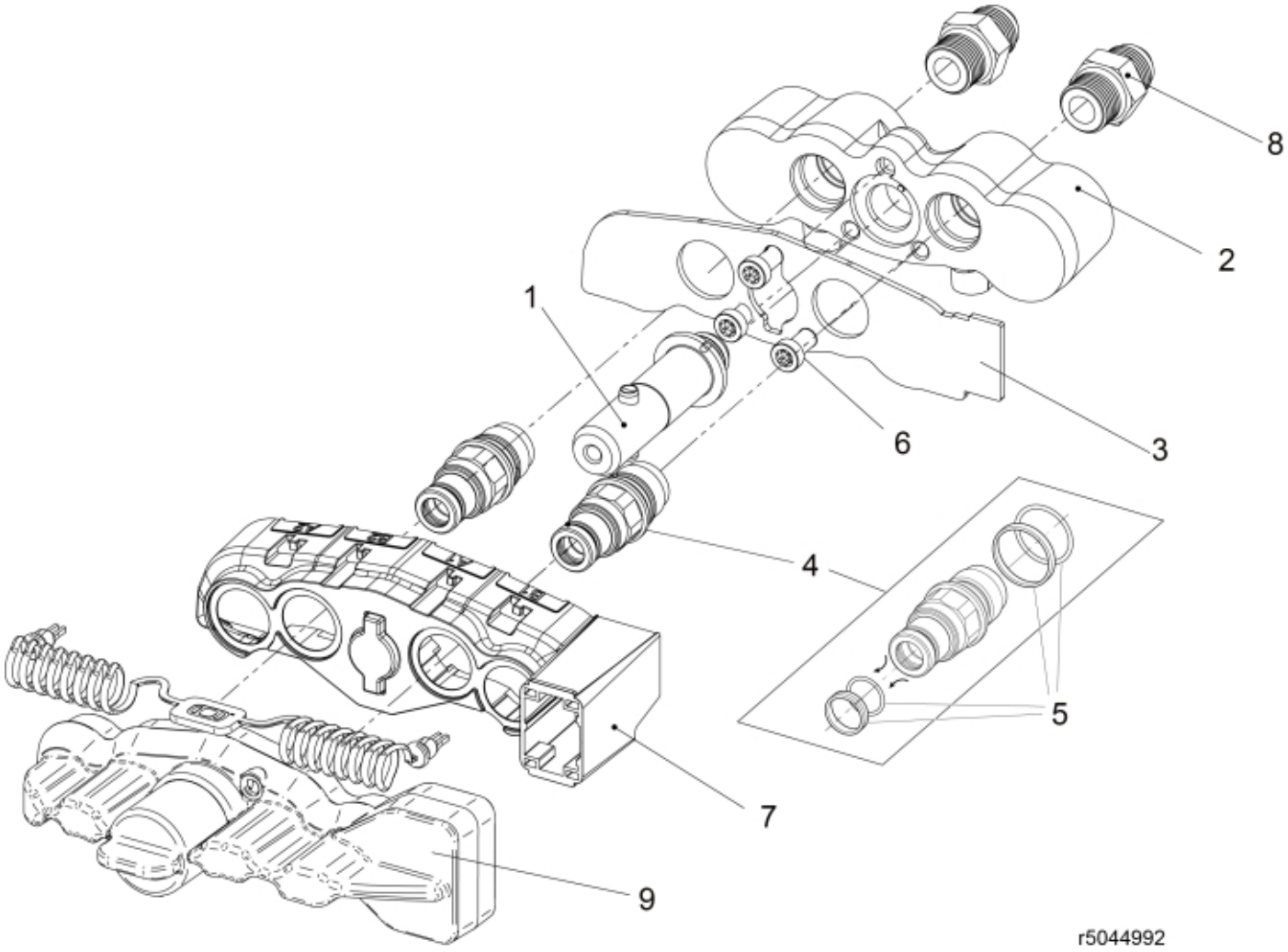

© 2025 Jost

Description	LCS
Part assemblies	Base MC2 J. 1 1/16"
Specification	Specification: Replaces 5044959

PartNo	Pos	Qty	Name	Specifications
5044993		1 PCS	Base MC2 J. 1 1/16"	Replaces 5044959
10570078	1	1	Adapter Multi coupling	
10570077	2	1 PCS	Connection block	
10570090	3	1 PCS	Cover plate Single 2	
4500294	4	2	Coupling (M)	Replaces 5044956/60017561
4501264	5	1	• Seal kit	1 seal kit/coupling required
5006019	6	3	Screw	8x16 fzb
10570096	7	1	Cap w. marking	Part is included in kit 10570154 Valve STM Professional Live3 OC
5028099	8	2	Coupling JIC	7/8" - 1 1/16"
5034232	9	1	Cover	Replaces 5033905

© 2025 Jost