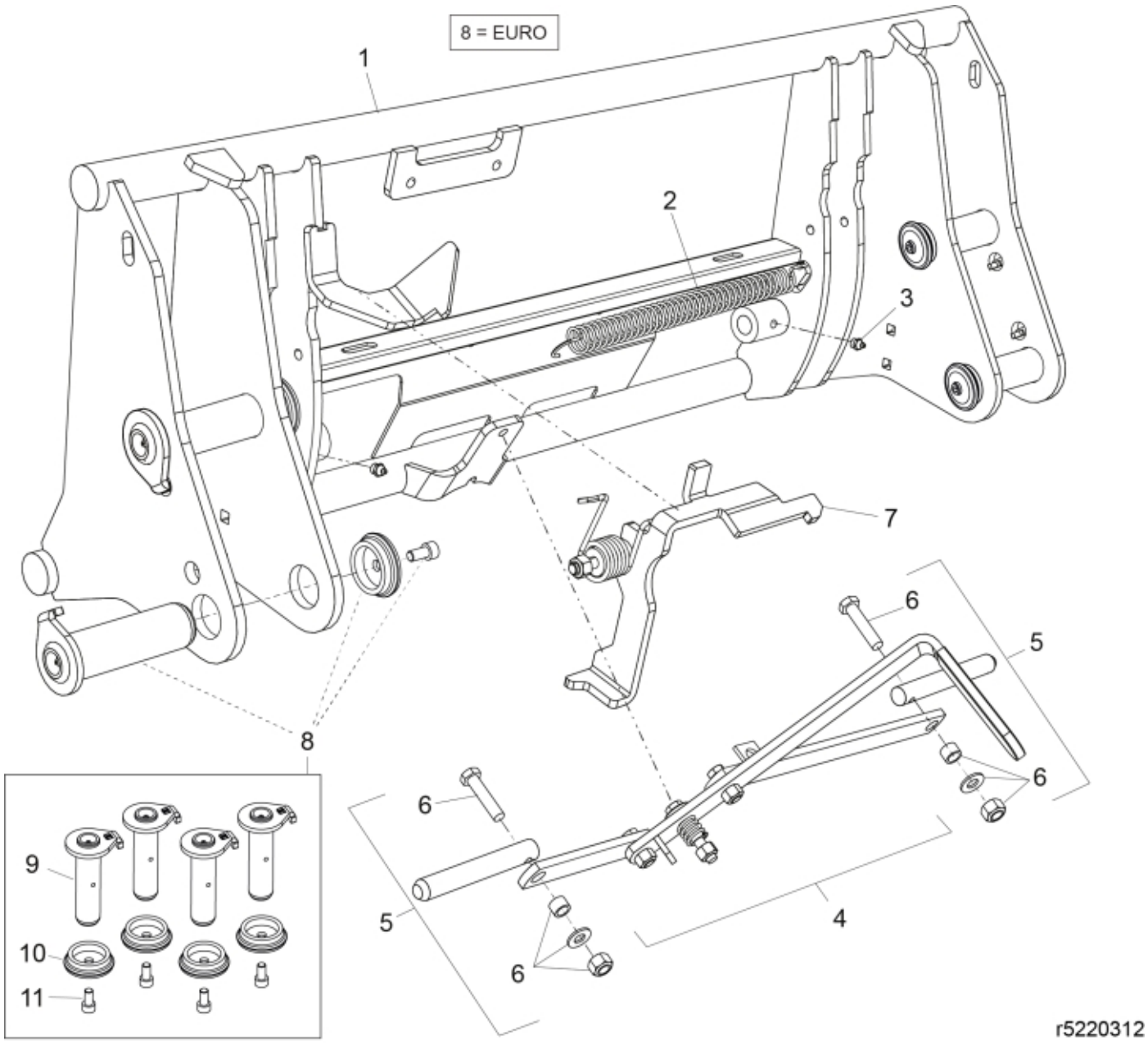

© 2025 Jost

Description	Tool carrier
Part assemblies	Euro
Specification	Specification: Glossy Black
	Serial number from: 7282198

PartNo	Pos	Qty	Name	Specifications
5220312-1		1	Euro	Glossy Black, 7282198
5220285-1	1	1 PCS	Tool carrier	Glossy Black
1101035	2	1	Spring	
5023005	3	2	Greaser	M 10 x 1
5220265	4	1	Lever kit	
4500859	5	2	Pin kit	Kit includes 1x Pin and 1x Screw kit
4500867	6	2	• Screw kit	Included in Pin kit
4500321	7	1	Click-on	
60021067	8	1	Pin kit	Replaces 9020071
60018062	9	4	• Pivot Pin	D=40, L=127mm
5215131	10	4	• Locking cover	
5050608	11	4	• Screw	MC6S M10x20 Loc

© 2025 Jost