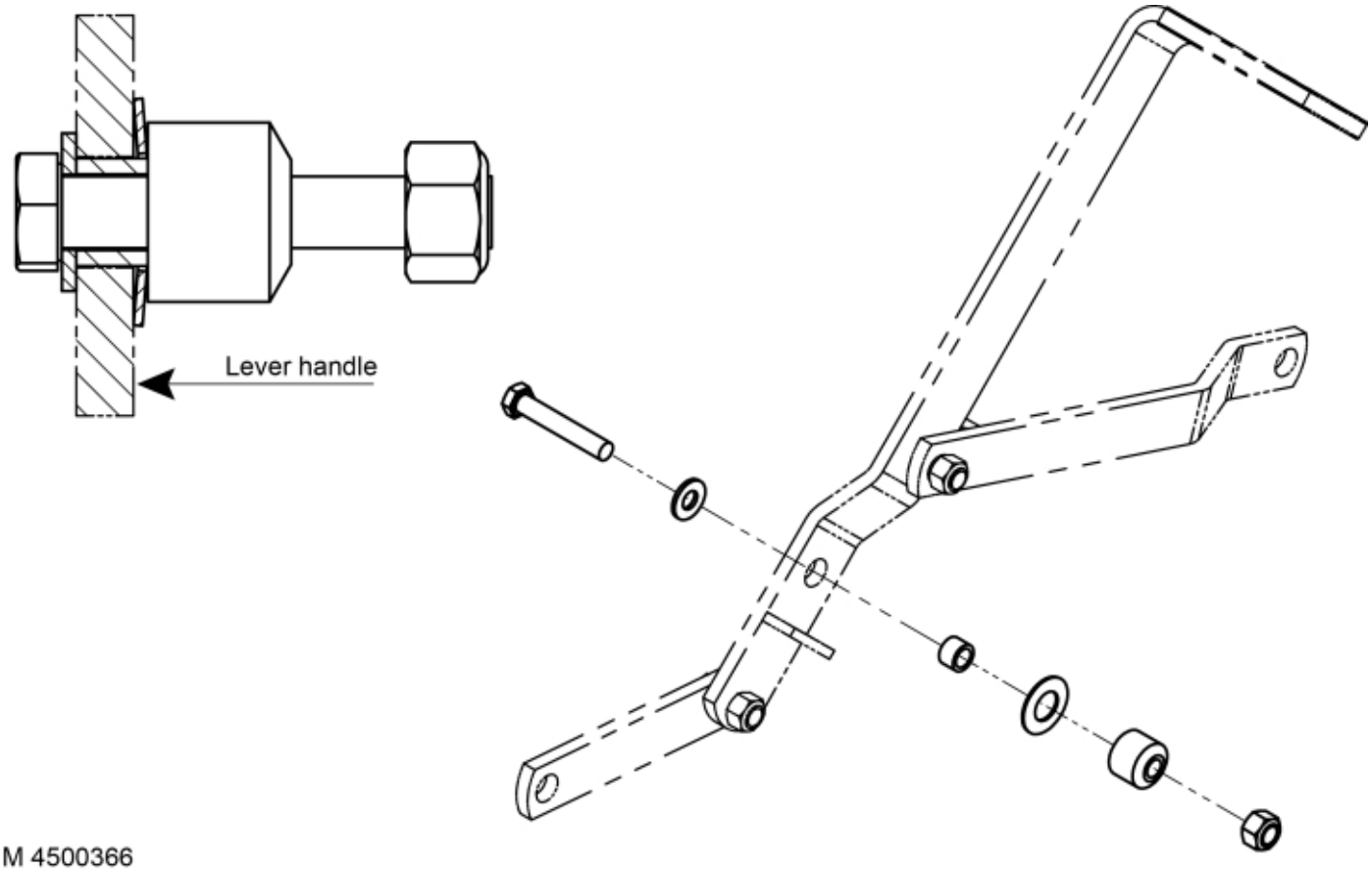


M 4500366


© 2025 Jost

**Part assemblies** Turning Centre Kit

| PartNo | Pos | Qty | Name | Specifications |
|---|---|---|---|---|
| 4500366 | | | Turning Centre Kit | |


© 2025 Jost