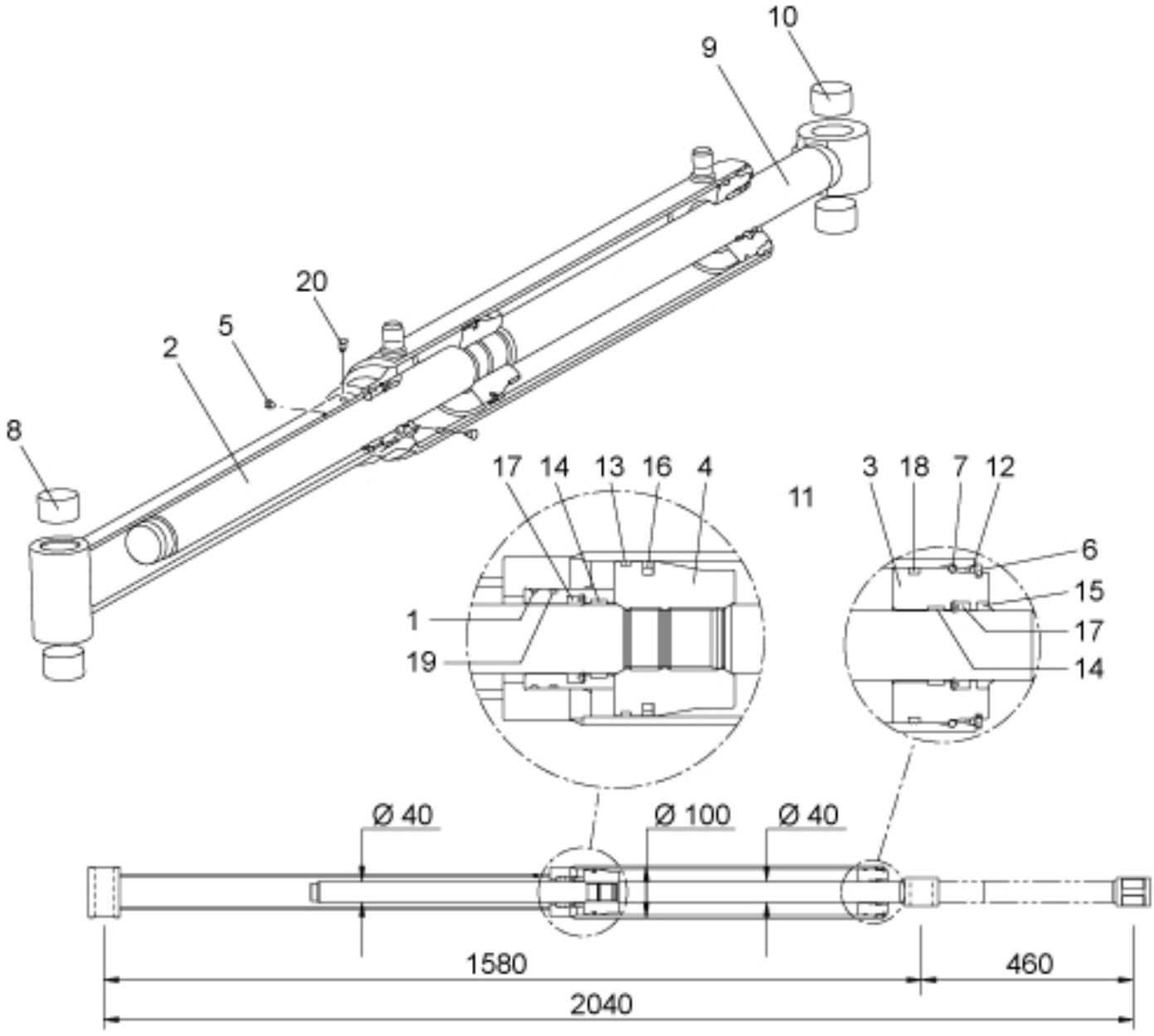
10
9
20
5
2
8
17 14 13 16 4
11
3 18 7 12
6
15
17
14
1
19
Ø 40
Ø 100
Ø 40
1580
460
2040
r12714310

© 2025 Jost

Description	100/40/40
Part assemblies	Tilt Cylinder
Specification	Serial number to: 7324779

PartNo	Pos	Qty	Name	Specifications
12700017	1	1	Guide	
12700915	2	1	Rear rod	
12710211	3	1 PCS	Bearing	
12710012	4	1	Piston	
5005983	5	2	Stop screw	S6SS M6x16
5016624	6	1	Retaining ring	
5016677	7	1	Retaining ring	
5018514	8	2	Bushing	D35 L=20
12714323	9	1	Piston rod cpl.	
5018513	10	2	• Bushing	D40 L=20
5040046	11	1	Seal kit	D100/40/40
5037265	12	1	• O-ring	91,6 x 3,53
5040018	13	1	• Guide ring	100/95 x 5,5
5040010	14	2	• Guide ring	40/45x9,7
5038101	15	1	• Wiper	40/50x7/10
5040028	16	1	• Piston seal	100/84,5 x 6,3
5038254	17	2	• Seal	40/50x10
5039008	18	1	• Seal kit	100 x 93,8 x 6,9
5039001	19	1	• Seal kit	58 x 53.4 x 4.1
5022095	20	1	• Plug	

© 2025 Jost