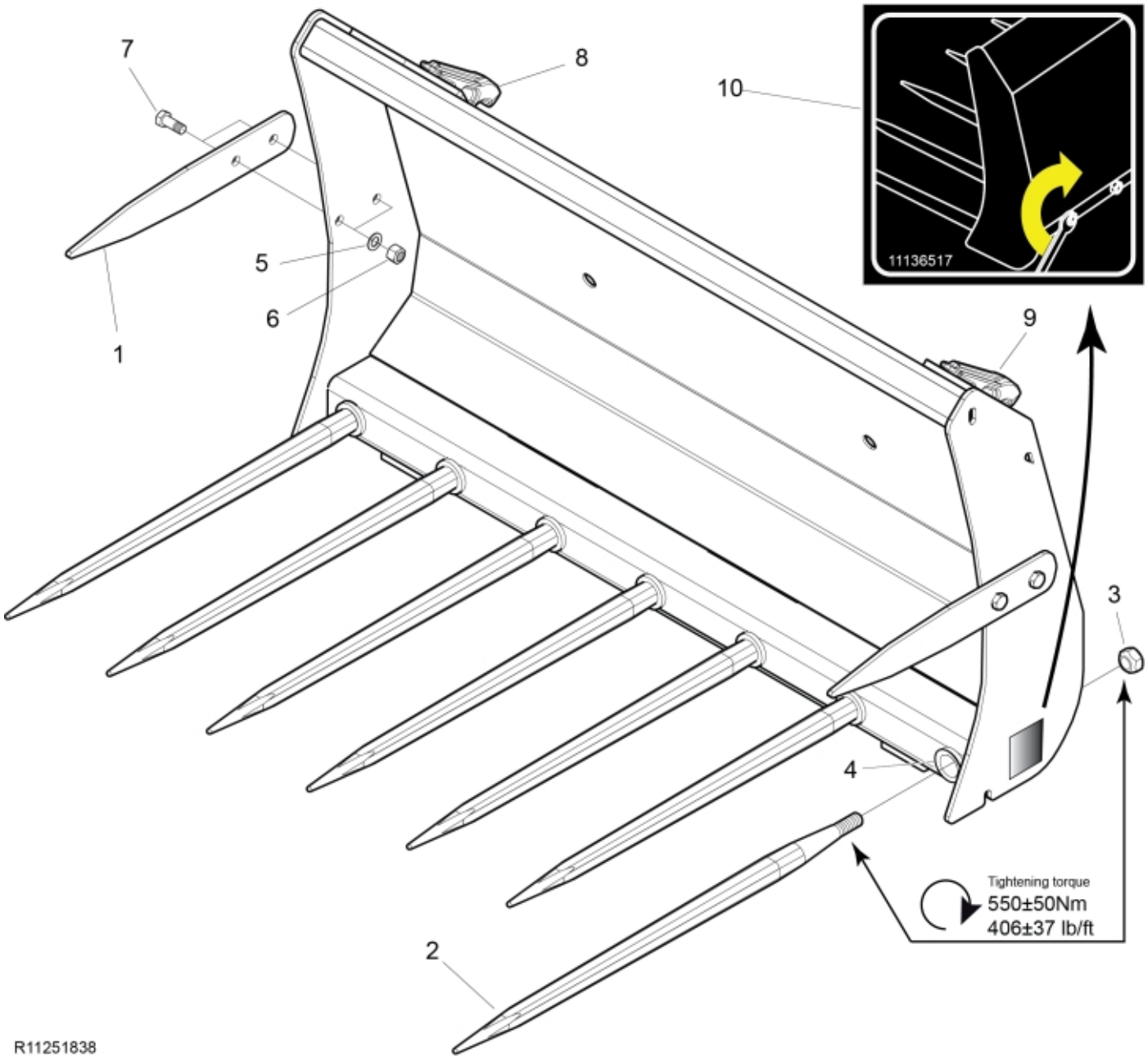
7
8
10
5
6
1
9
3
4
2
11136517
Tightening torque
550±50Nm
406±37 lb/ft
R11251838

© 2025 Jost

Part assemblies	Manure Fork 130 Alo Type 3
Specification	Year From: 1/1/2010 12:00:00 AM

PartNo	Pos	Qty	Name	Specifications
11251833			Manure Fork 130 Alo Type 3	1/1/2010 12:00:00 AM
11260256-22	1	2	Side tine	
5068109-17	2	7	Tine with nut	L=820mm (replaces 5068101)
5068111	3	1	• Nut	Conus 1
9010121	4	7	Sleeve	Conus 1
5002127	5	4	Screw	M6S M14 x 35
5011556	6	4	Nut	M14
5013107	7	4	Washer	BRB 15 x 26 x 2
11260099	8	1 PCS	Implement hook RH	Alo Type 3
11260100	9	1 PCS	Implement hook LH	Alo Type 3
11136517	10	1	Warning decal	"Tightening of tine"
5022119		2	Plug	

© 2025 Jost