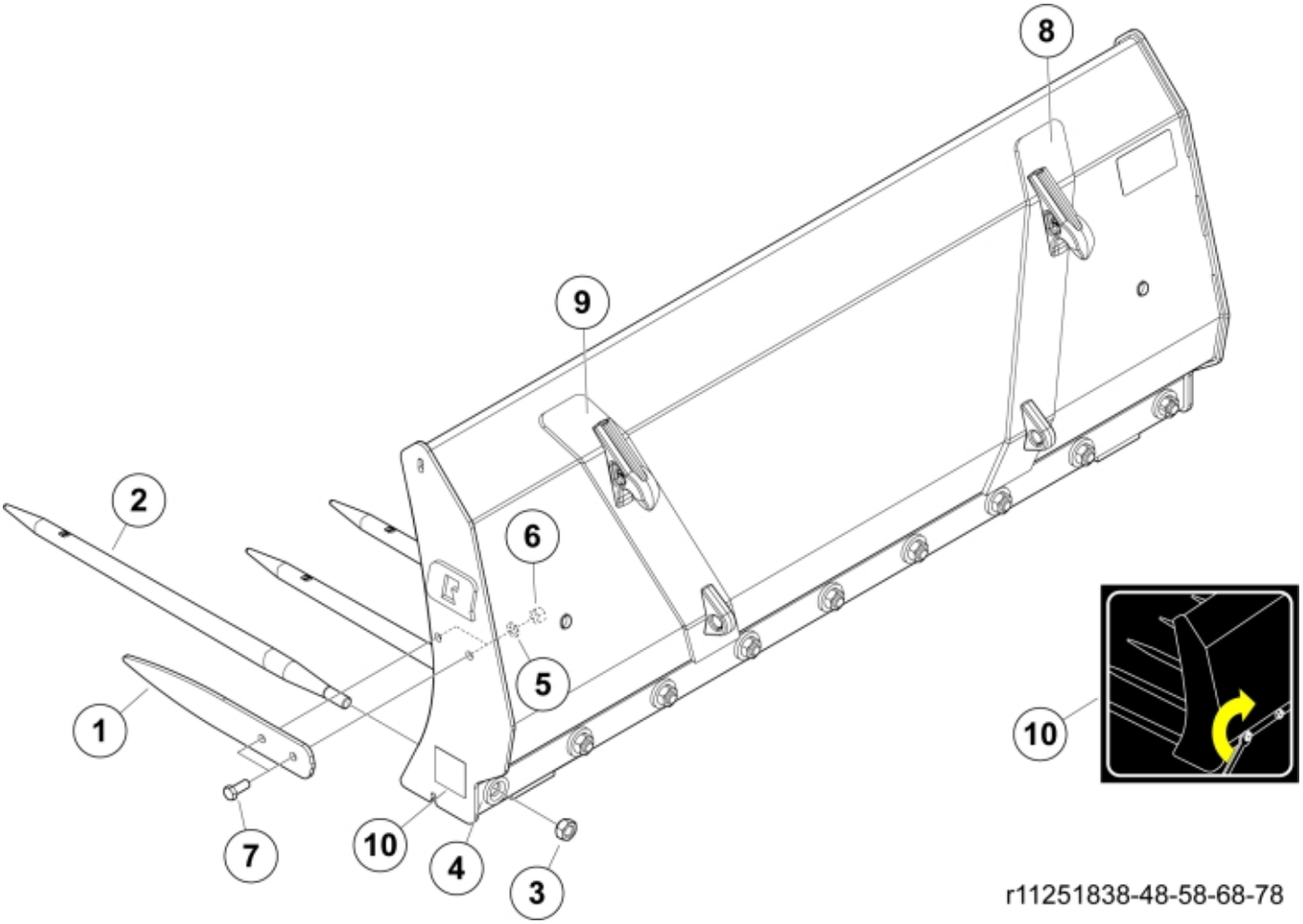

r11251838-48-58-68-78

© 2025 Jost

Part assemblies	Manure Fork M+ 130 Euro
Specification	Year From: 1/1/2010 12:00:00 AM

PartNo	Pos	Qty	Name	Specifications
11251838		1 PCS	Manure Fork M+ 130 Euro	1/1/2010 12:00:00 AM
11260256-22	1	2	Side tine	
5068109-17	2	7	Tine with nut	L=820mm (replaces 5068101)
5068111	3	1	• Nut	Conus 1
9010121	4	7	Sleeve	Conus 1
5013107	5	4	Washer	BRB 15 x 26 x 2
5011556	6	4	Nut	M14
5002127	7	4	Screw	M6S M14 x 35
11260077	8	1 PCS	Implement hook RH	Euro
11260078	9	1 PCS	Implement hook LH	Euro
11136517	10	1	Warning decal	"Tightening of tine"
5022119		2	Plug	

© 2025 Jost