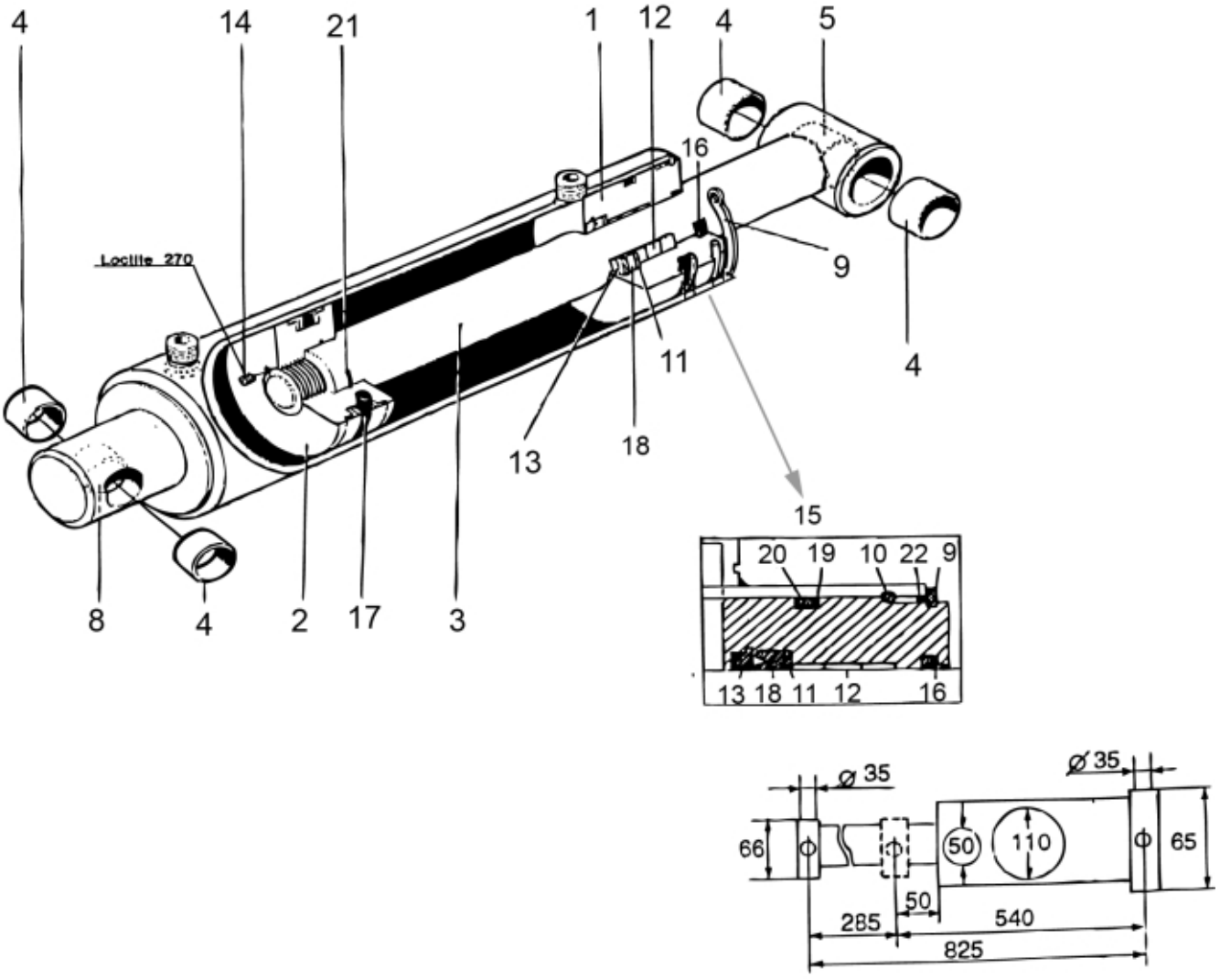

r745010a

© 2025 Jost

Part assemblies Low pressure hydraulic cylinder

PartNo	Pos	Qty	Name	Specifications
745011	1	1 PCS	Bearing	
745012	2	1	Piston	
745023	3	1	Piston rod cpl.	
5018514	4	4	Bushing	D35 L=20
745021	5	1	Spacer	
745021	8	1	Spacer	
5016609	9	1	Retaining ring	
5016673	10	1	Retaining ring	
5038501	11	1	Support Ring	
5038911	12	3	Guide ring	
5016751	13	1	Retaining ring	
5005106	14	1	Stop screw	MF6S M8x16
5036158	15	1	Seal kit	
5038104	16	1	• Wiper	50/60 x 7/10
5038291	17	1	• Piston seal	
5038262	18	1	• Seal kit	
5038408	19	1	• Support Ring	
5037412	20	1	• O-ring	
5037308	21	1	• O-ring	
5037218	22	1	• O-ring	

© 2025 Jost