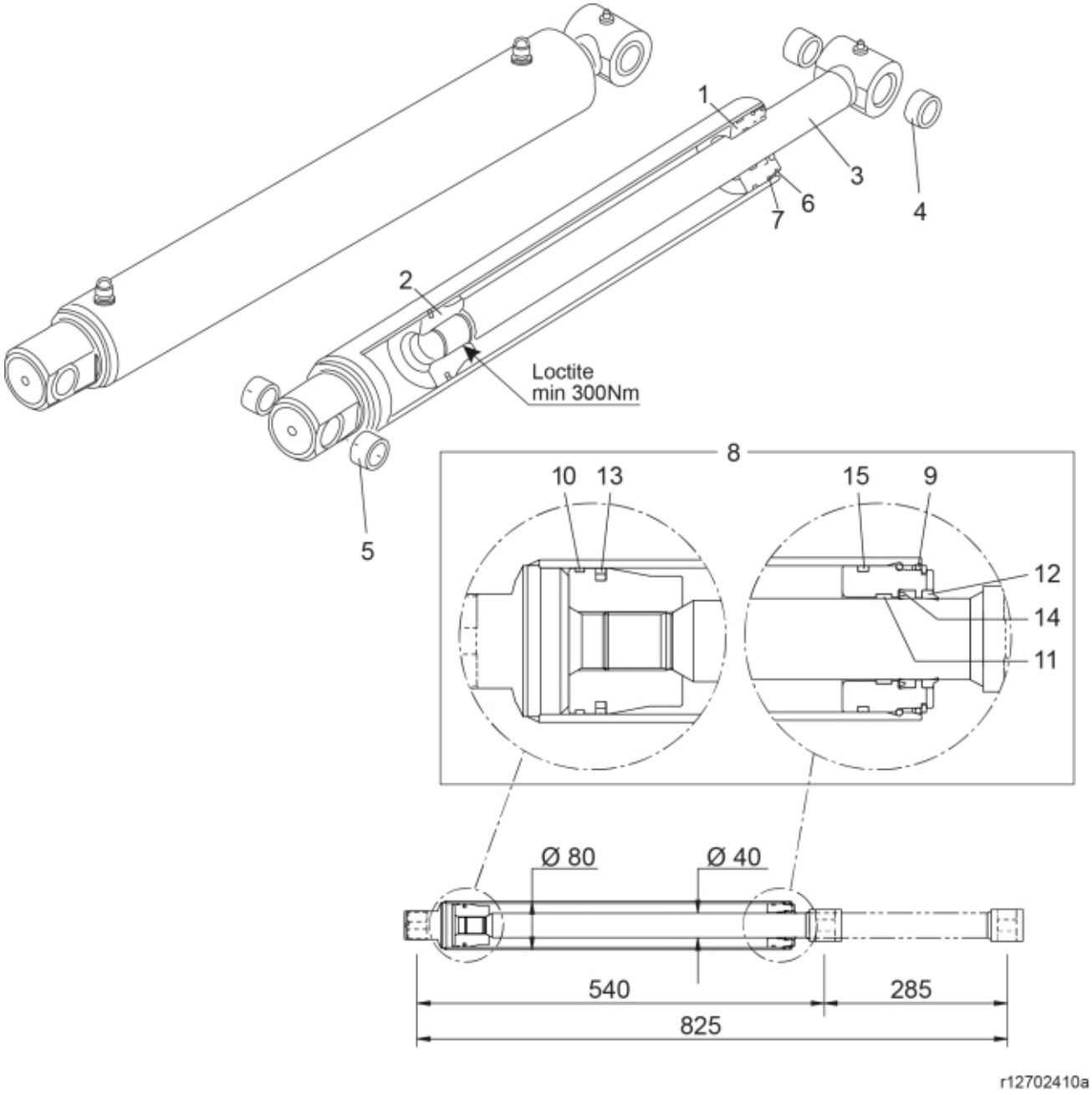
1
2
3
4
5
6
7
Loctite
min 300Nm
8
10
13
15
9
12
14
11
Ø 80
Ø 40
540
285
825
r12702410a

© 2025 Jost

Description	80/40
Part assemblies	Cylinder
Specification	Specification: Glossy Black
	Year To: 4/7/2026 12:00:00 AM

PartNo	Pos	Qty	Name	Specifications
12708011	1	1	Bearing	D80/40
12708012	2	1	Piston	D80
12702523	3	1	Piston rod cpl.	
5018514	4	2	• Bushing	D35 L=20
5018514	5	2	• Bushing	D35 L=20
5016620	6	1	Retaining ring	
5016667	7	1	Retaining ring	
5033706	8	1	Seal kit	
5037241	9	1	• O-ring	72,62 x 3,53
5040015	10	1	• Guide ring	80/75 x 5,5
5040010	11	1	• Guide ring	40/45x9,7
5038101	12	1	• Wiper	40/50x7/10
5040025	13	1	• Piston seal	80/64,5 x 6,3
5038254	14	1	• Seal	40/50x10
5039005	15	1	• Cover seal	80 x 73,6 x 6,4

© 2025 Jost