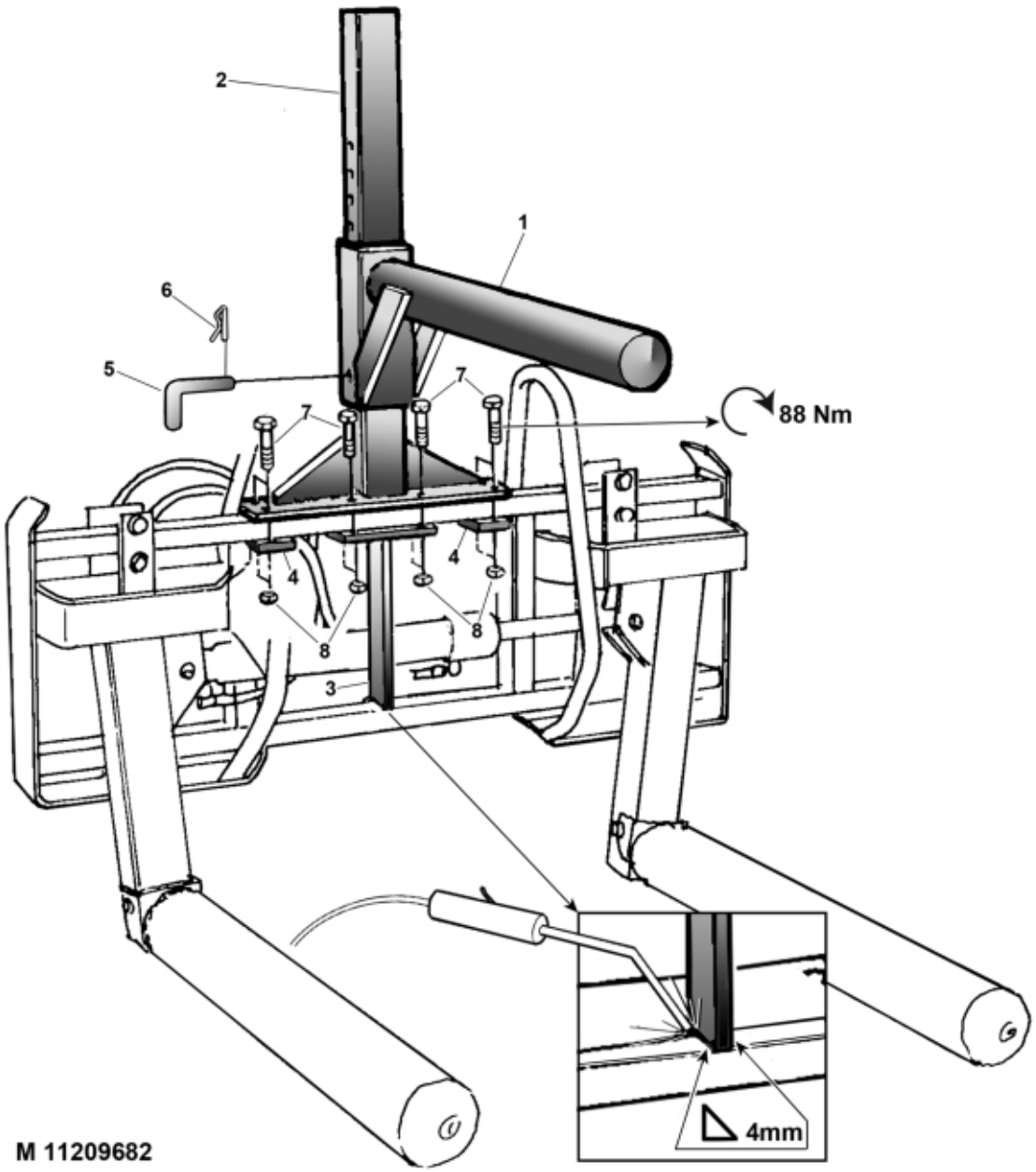

© 2025 Jost

Part assemblies	Bale support
Specification	Year From: 1/1/2002 12:00:00 AM
	Year To: 3/31/2009 12:00:00 AM

PartNo	Pos	Qty	Name	Specifications
1209730	1	1 PCS	Support	
1209735	2	1 PCS	Pole	
1209738	3	1 PCS	Support	
1209732	4	2 PCS	Washer	
352136	5	1 PCS	Pin	
5016051	6	1	Spring	
5002111	7	8	Screw	M6S M12x80
5011555	8	8	Nut	M12 Loc

© 2025 Jost