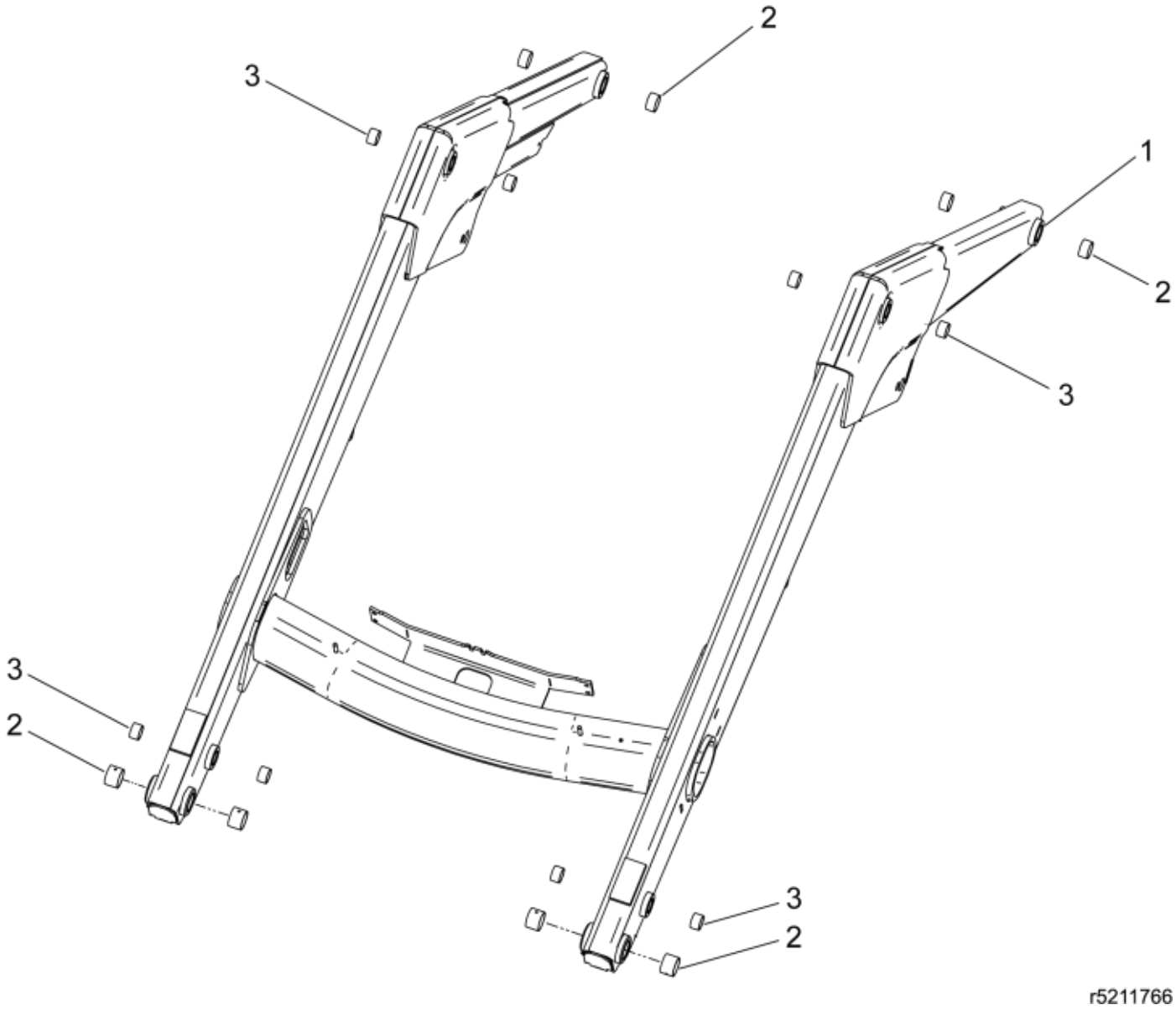

© 2025 Jost

Part assemblies	Loader beam w. bushings
Specification	Specification: Glossy Black

PartNo	Pos	Qty	Name	Specifications
5211765-1	1	1	Loader beam w. bushings	Glossy Black
5018904	2	8	• Bushing	D40 L=30
5018514	3	8	• Bushing	D35 L=20

© 2025 Jost