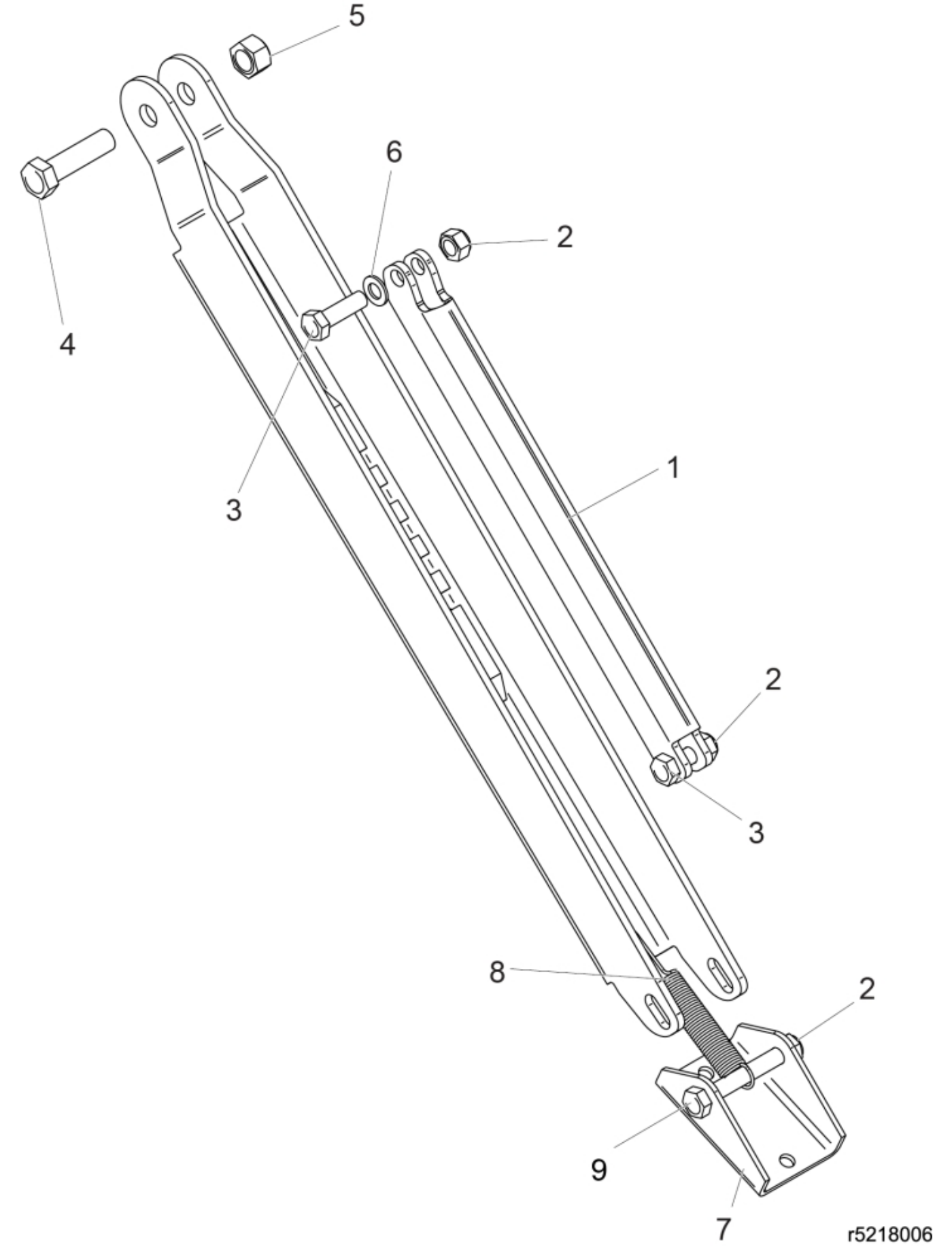

© 2025 Jost

Part assemblies	Support leg
Specification	Specification: Glossy Black

PartNo	Pos	Qty	Name	Specifications
5218011-1	1	1 PCS	Stay	Glossy Black
5011911	2	3	Nut	M12
5002104	3	2	Screw	M6S M12X40 (8.8)
5002155	4	1	Screw	M6S 16 x 60 (8.8)
5011569	5	1	Nut	
5013103	6	1	Washer	BRB 13x24
4500097-1	7	1	Support foot kit	Glossy Black
5021914	8	1	• Spring	
5002936	9	1	• Screw	M6S 8.8 fzb M12 x 1,75 x 90

© 2025 Jost