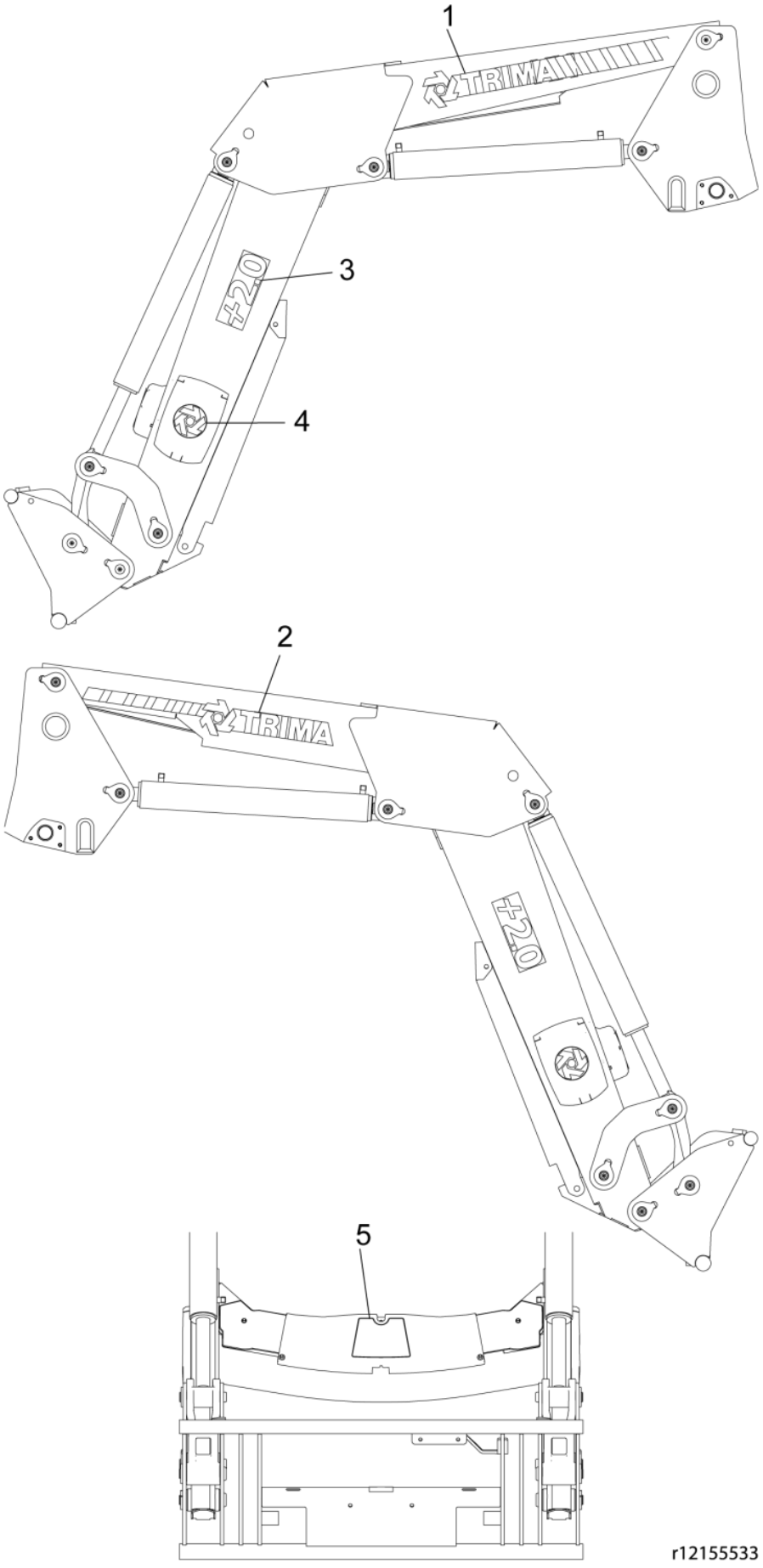

© 2025 Jost

Part assemblies Decal kit +2.0 S/N - 7305476

PartNo	Pos	Qty	Name	Specifications
11133860	1	1 PCS	Trima LH	
11133861	2	1 PCS	Trima RH	
11133865	3	2 PCS	+2.0	
11133875	4	2 PCS	Trima	
11133876	5	1 PCS	Trima	

© 2025 Jost