3 = ALÖ Std.
8 = EURO

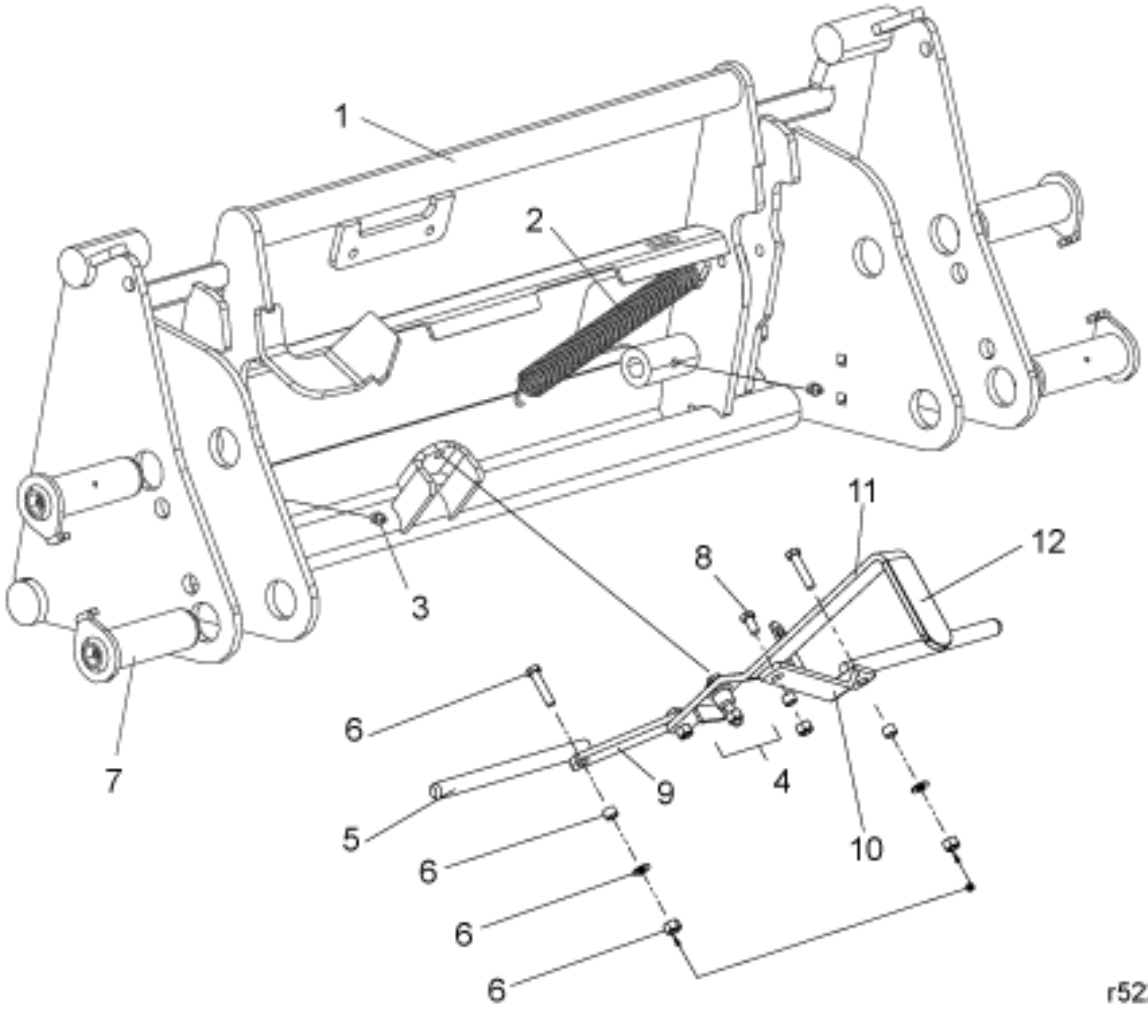

r5229831_old

© 2025 Jost

Description	Tool carrier
Part assemblies	Euro/Alo Type 3
Specification	Serial number to: 723698

PartNo	Pos	Qty	Name	Specifications
5229831-1		1 PCS	Euro/Alo Type 3	723698
5229835-1	1	1	Tool carrier	Glossy Black
1101035	2	1	Spring	
5023005	3	2	Greaser	M 10 x 1
4500366	4	1 PCS	Turning Centre Kit	
4500865	5	2	Pin kit	Includes 4500867
4500867	6	2	• Screw kit	Included in Pin kit
60021067	7	1	Pin kit	Replaces 9020071
5002077	8	2	Screw	M6S 10x30
5220345	9	1 PCS	Shaft	
5220343	10	1 PCS	Shaft	
5220342	11	1 PCS	Lever	
5022144	12	1	Cover	

© 2025 Jost