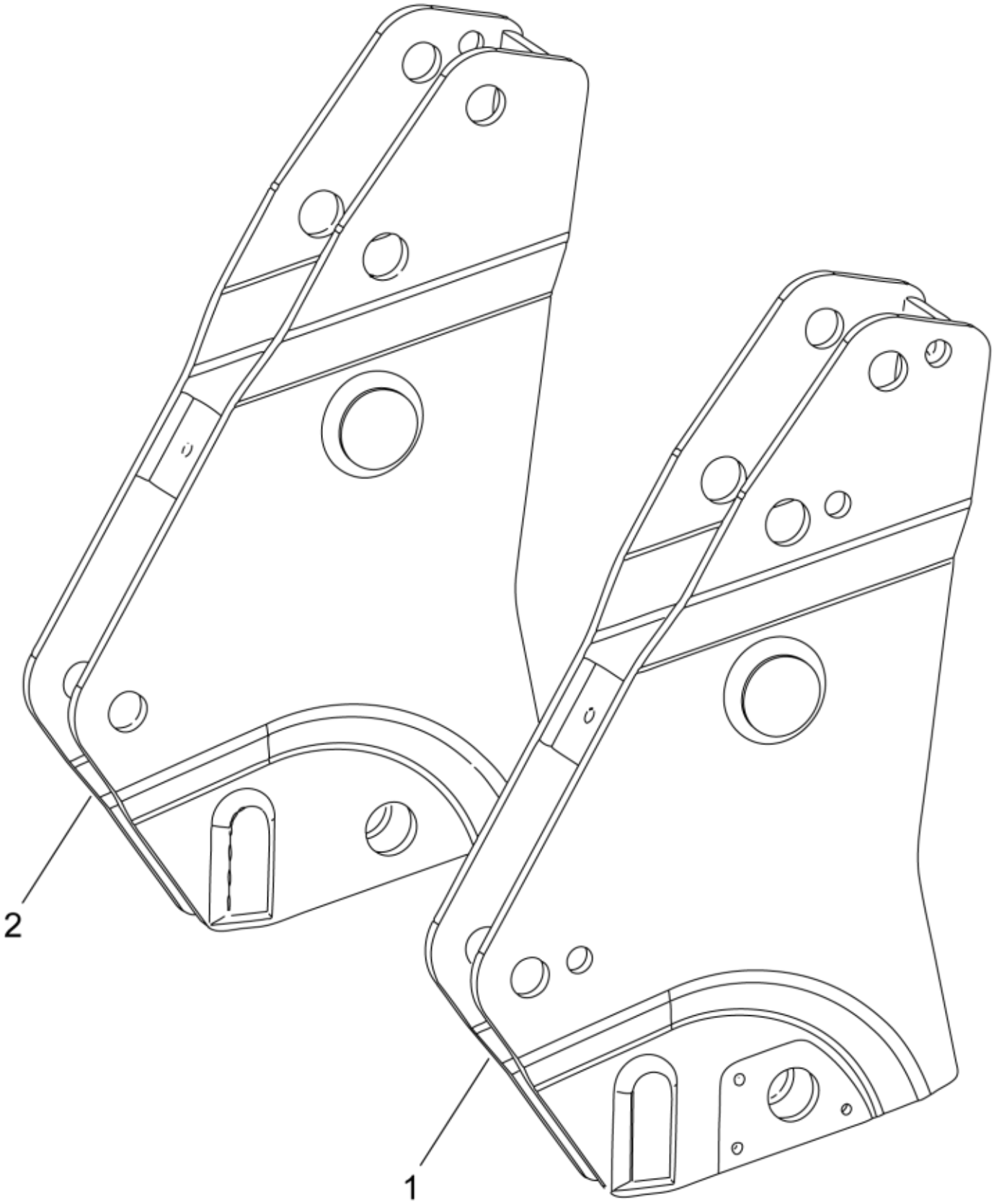

r5212513_5212523

© 2025 Jost

Part assemblies		Bearing boxes		
Specification		Specification: Glossy Black		
PartNo	**Pos**	**Qty**	**Name**	**Specifications**
5220203-1		1	Bearing boxes	Glossy Black
5212513-1	1	1	• Bearing box LH	Glossy Black
5212523-1	2	1	• Bearing box RH	Glossy Black

© 2025 Jost