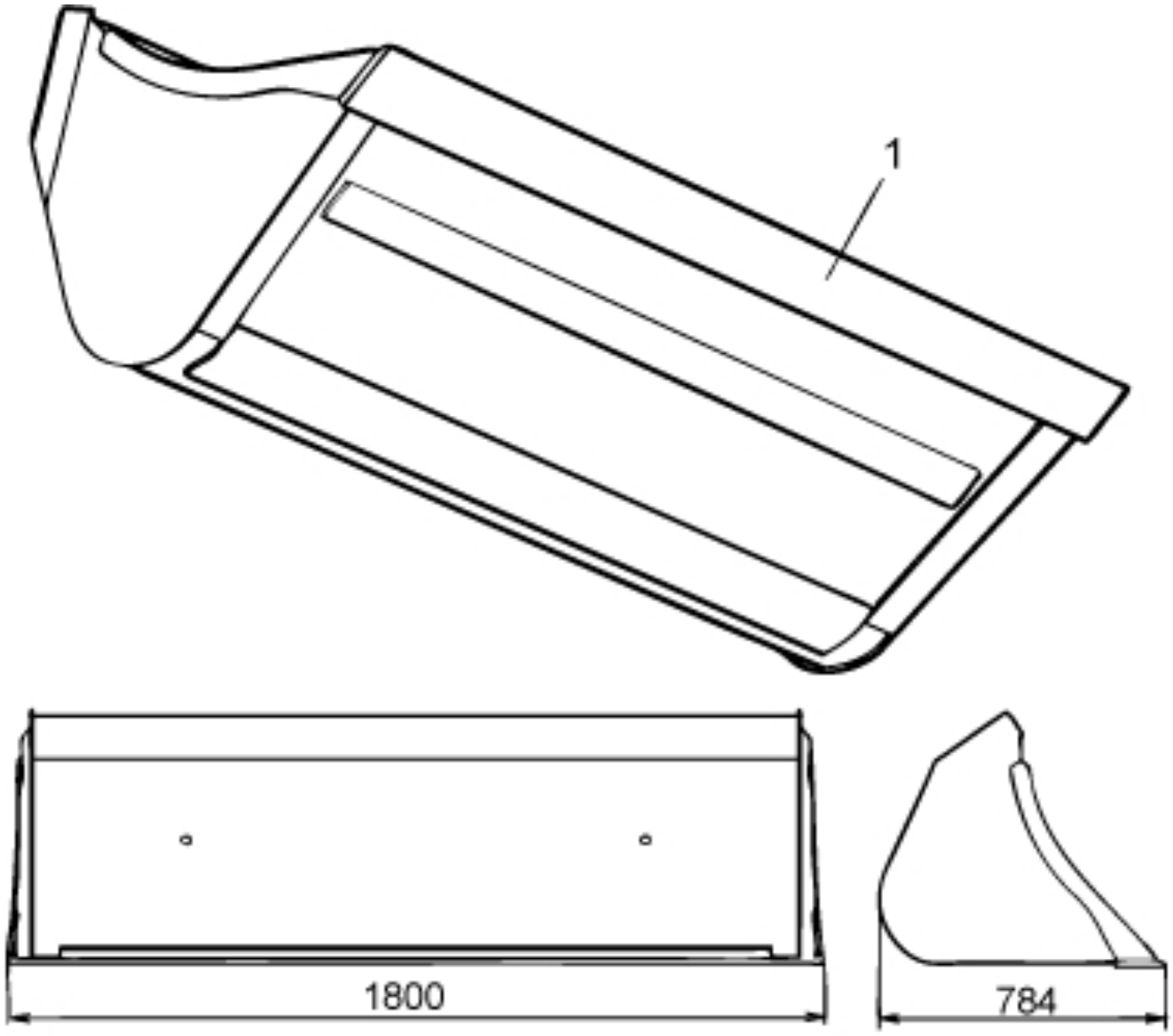

r11251198

© 2025 Jost

Part assemblies	Bucket 180L Alo Type 3
Specification	Year From: 1/1/2003 12:00:00 AM
	Year To: 6/30/2009 12:00:00 AM

PartNo	Pos	Qty	Name	Specifications
11260047	1	1	Cutting edge	
5022119		2	Plug	

© 2025 Jost