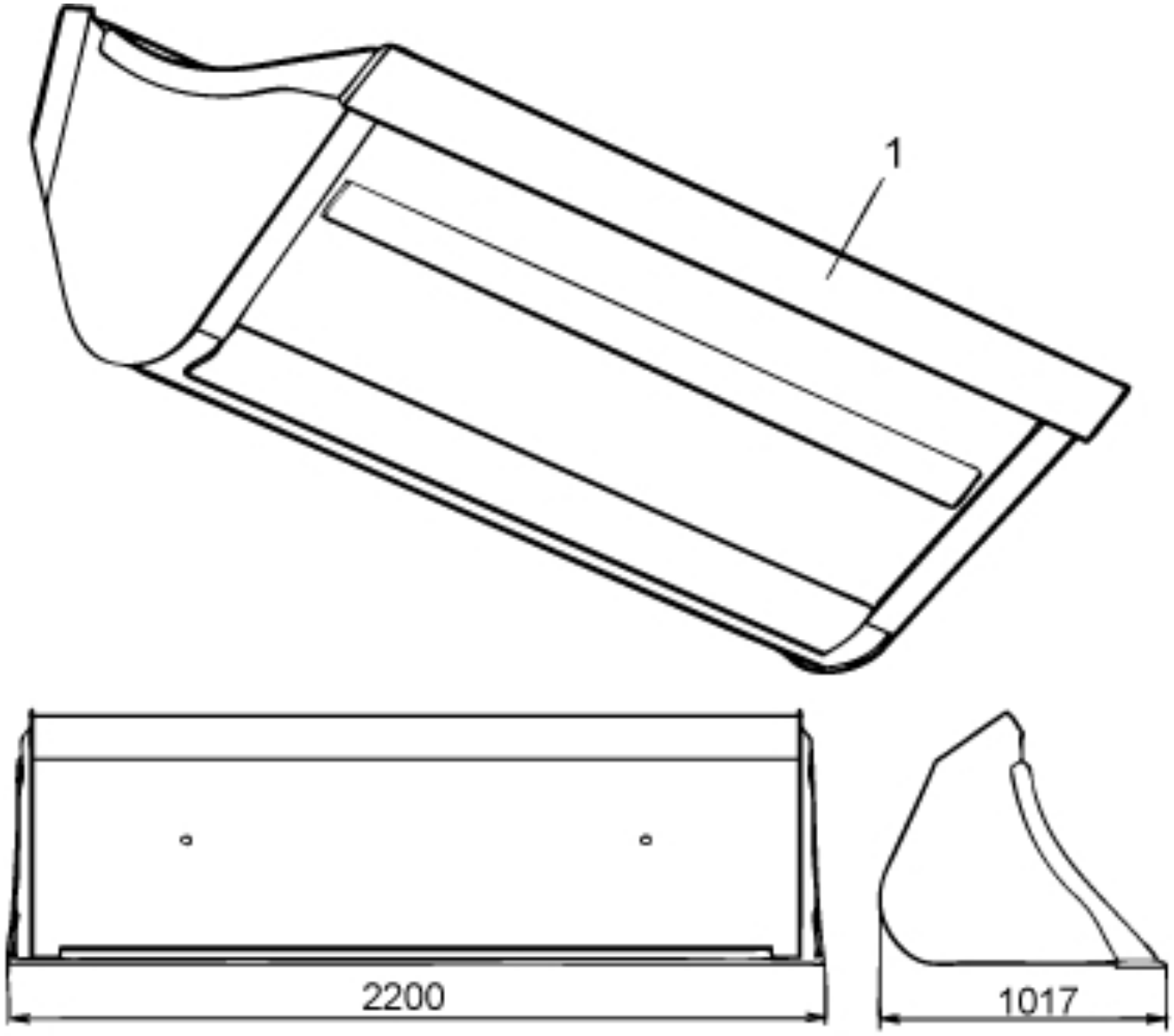

r11251213

© 2025 Jost

Part assemblies	Bucket 220LV Alo Type 3
Specification	Year From: 1/1/2003 12:00:00 AM
	Year To: 10/31/2009 12:00:00 AM

PartNo	Pos	Qty	Name	Specifications
11260041	1	1	Cutting edge	
5022119		2	Plug	

© 2025 Jost