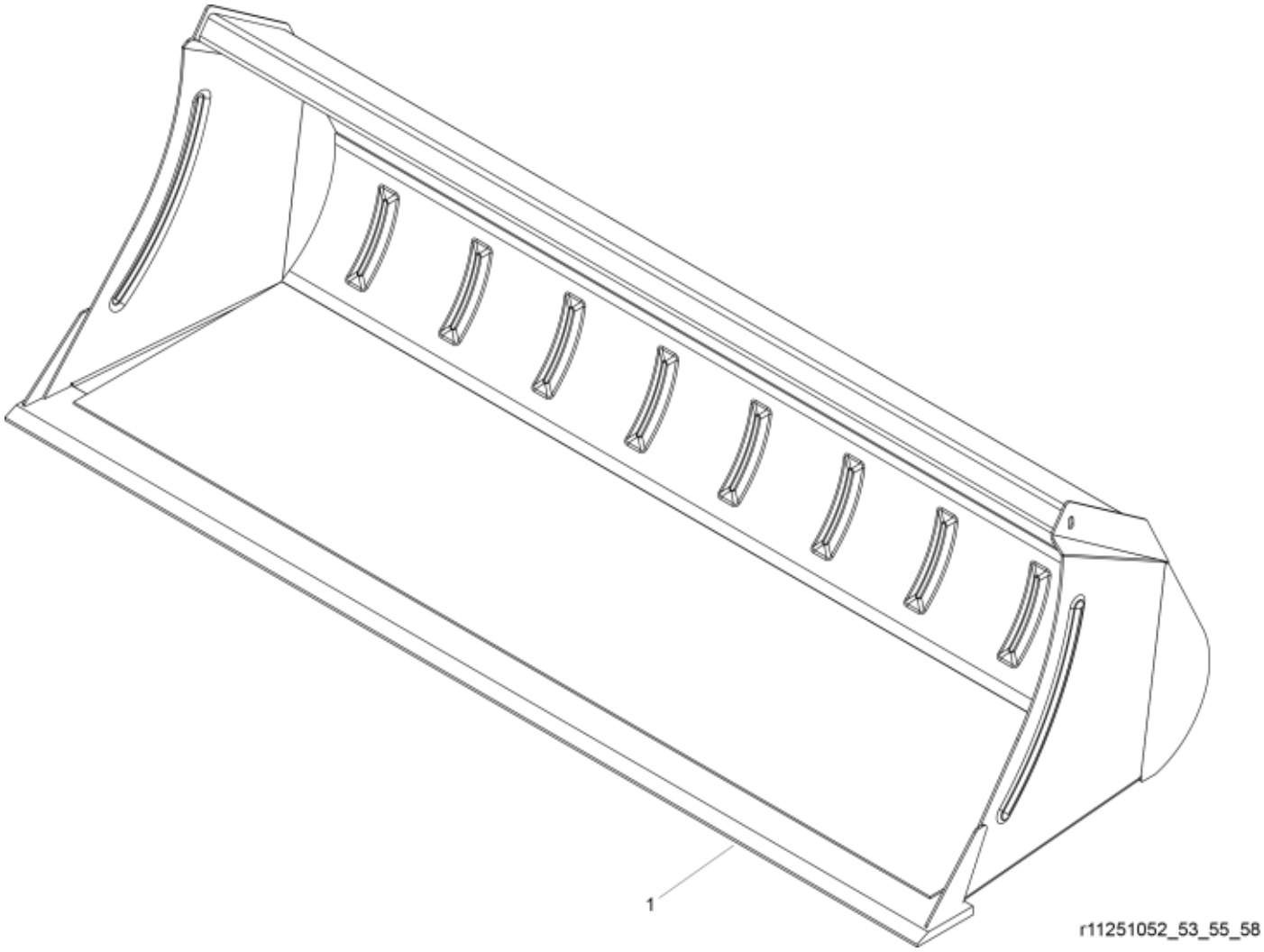



© 2025 Jost

| | |
|---|---|
| **Part assemblies** | Bucket 240H SMS |
| **Specification** | Year From: 1/1/2003 12:00:00 AM |

| PartNo | Pos | Qty | Name | Specifications |
|---|---|---|---|---|
| 11260039 | 1 | 1 | Cutting edge | Single Part |
| 5022119 | | 2 | Plug | |
| 11137127 | 2 | 1 PCS | Decal | "Original Implements" |


© 2025 Jost