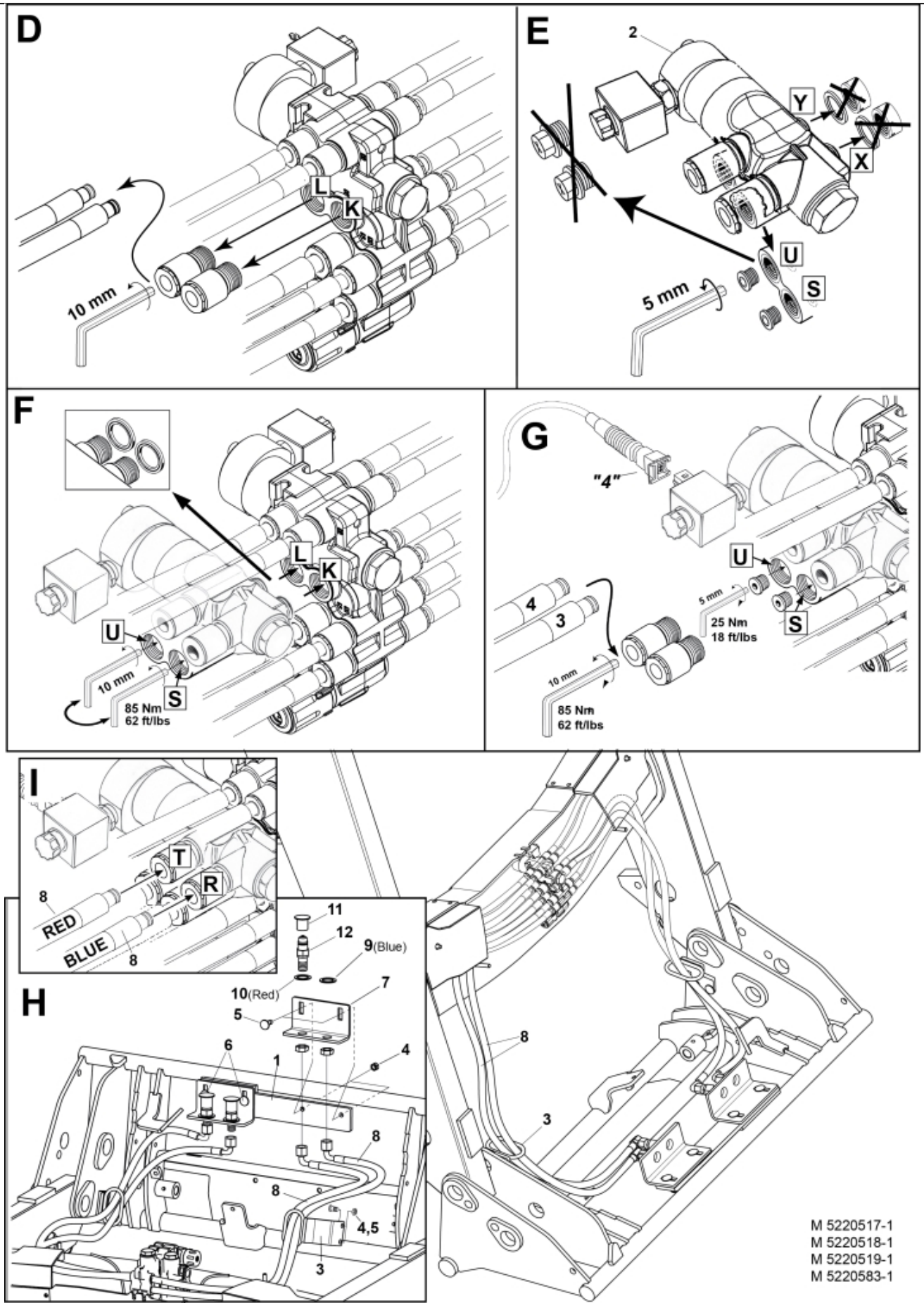
D
L
K
10 mm
E
2
Y
X
U
S
5 mm
F
L
K
U
10 mm
S
85 Nm
62 ft/lbs
G
"4"
U
4
3
5 mm
25 Nm
18 ft/lbs
S
10 mm
85 Nm
62 ft/lbs
I
T
R
8
RED
BLUE
8
H
11
12
9(Blue)
10(Red)
7
5
6
1
4
8
8
4,5
3
8
3
M 5220517-1
M 5220518-1
M 5220519-1
M 5220583-1

© 2025 Jost

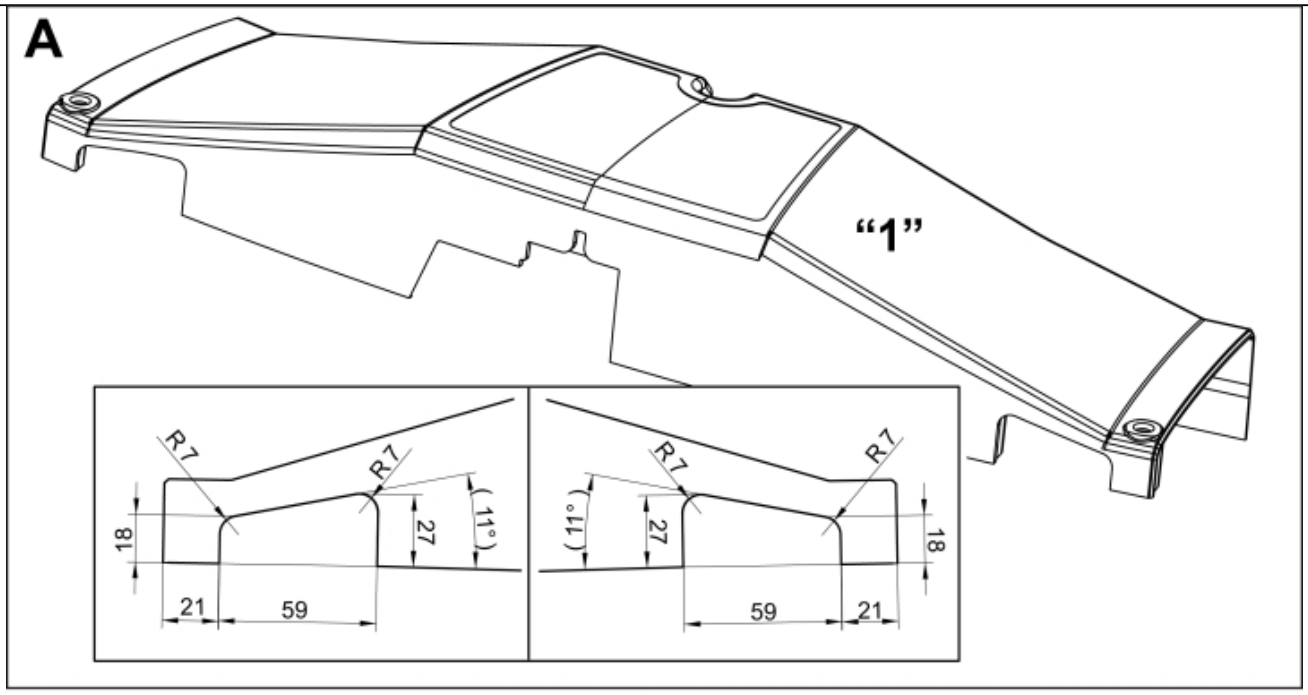

M 5220517-518-519-583-2

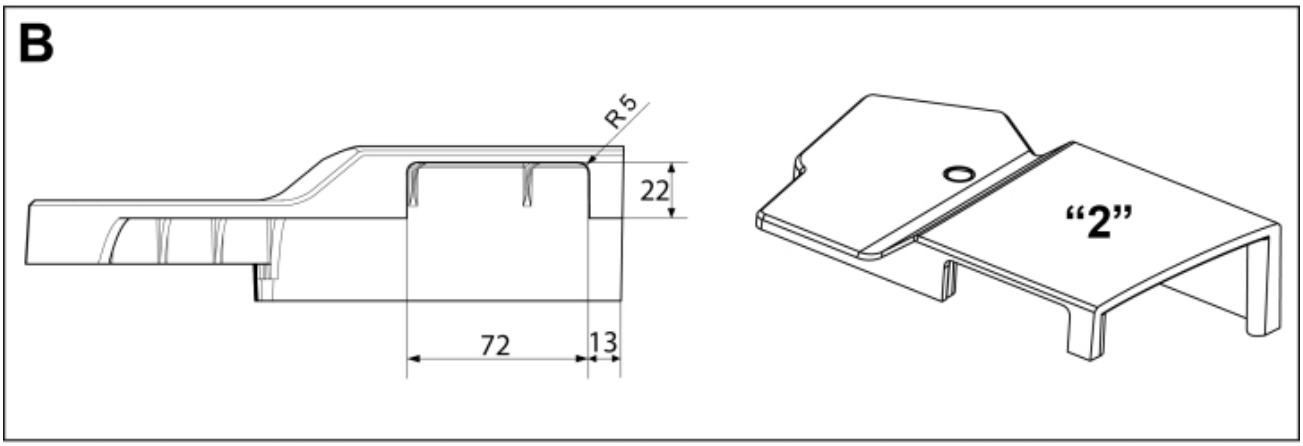

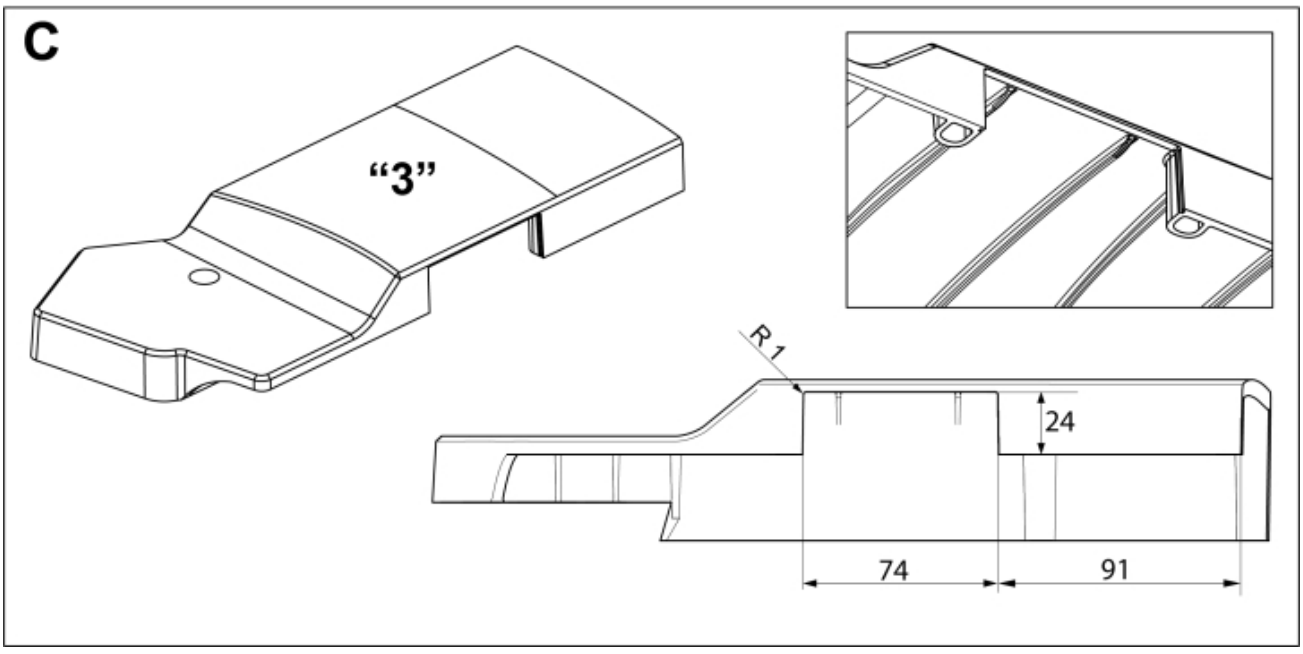

© 2025 Jost

Part assemblies		4th service LCS		
Specification		Specification: DM		
PartNo	**Pos**	**Qty**	**Name**	**Specifications**
5220518		1 PCS	4th service LCS	DM
5219189	1	1 PCS	Bracket Extension	
10550260	2	1 PCS	Diverter valve	
5219183	3	1	Hose guide	
5011554	4	6	Nut	Loc-King M10
5006002	5	4	Screw	MVBF 10x30
5006003	6	2	Screw	MVBF 10x40
9031522		1 PCS	Hose kit	
5220303	7	1	• Bracket	
9032614	8	2 PCS	• Hose	3/8" L=1150mm (9031475)
5022159	9	1	• Washer, blue	
5022157	10	1	• Washer, red	
5044129	11	2	• Dust Cover	1/2" Male
5044940	12	2	• Coupling	ISO-A 1/2" Male - G3/8
5021959		1 PCS	Switch cpl.	

© 2025 Jost