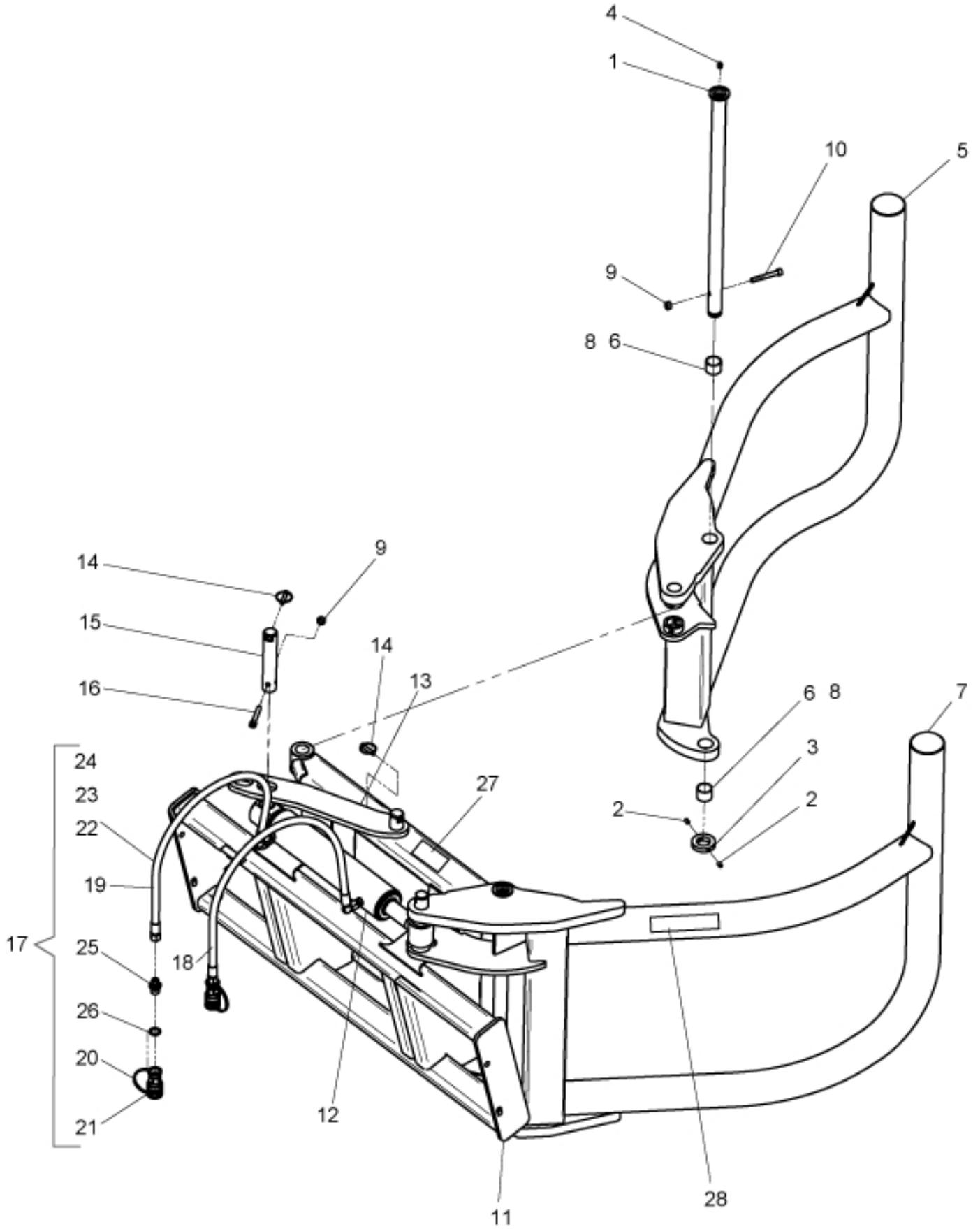

r11250180

© 2025 Jost

Part assemblies	Flexigrip 120
Specification	Year From: 1/1/2001 12:00:00 AM
	Year To: 12/31/2009 12:00:00 AM

PartNo	Pos	Qty	Name	Specifications
1116703	1	2 PCS	Pin	
5005444	2	4 PCS	Stop screw	S6SS M8x16
1109551	3	2	Locking Ring	
5023005	4	2	Greaser	M 10 x 1
1510367	5	1 PCS	Grab arm LH	
5018517	6	2 PCS	• Bushing	D35 L=30
1510368	7	1 PCS	Grab arm RH	
5018517	8	2 PCS	• Bushing	D35 L=30
5011554	9	4	Nut	Loc-King M10
5004079	10	2 PCS	Screw	MC6S M10x75
1510341	11	1 PCS	Frame	- 200409
60019103	11	1 PCS	Frame	Replaces 11262494 from 2016-10
60126216-1	12	1	Cylinder	4/8/2026 12:00:00 AM
1209758	13	1	Locking mechanism	
1102001	14	2	Linch pin	
60032873	15	2 PCS	Pin	Replaces 1116701
5004082	16	2 PCS	Screw	MC6S 10x65
10377023	17	1	Hose kit	
1103147	18	1 PCS	• Hose	3/8"
1103113	19	1 PCS	• Hose	3/8" L=500 3/8GRLM - 3/8G90LMC
5044130	20	2	• Dust Cover	Part is included in kit 60007907 Hose cpl., 9032177 Hose cpl.
5044127	21	2	• Quick Coupling	1/2", Part is included in kit 60007907 Hose cpl., 9032177 Hose cpl.
5022177	22	1	• Cable tie	Red
5022179	23	1	• Cable tie	Blue
5033606	24	1	• Cable tie	7,5 x 385
1120011	25	2	• Adaptor	R1/2"-R3/8"
5013604	26	2	• Washer	Copper 21x28x2
11136514	27	1	Warning decal	"Max 1000 kg"
11136511	28	1 PCS	Decal, Brand	Flexigrip

© 2025 Jost