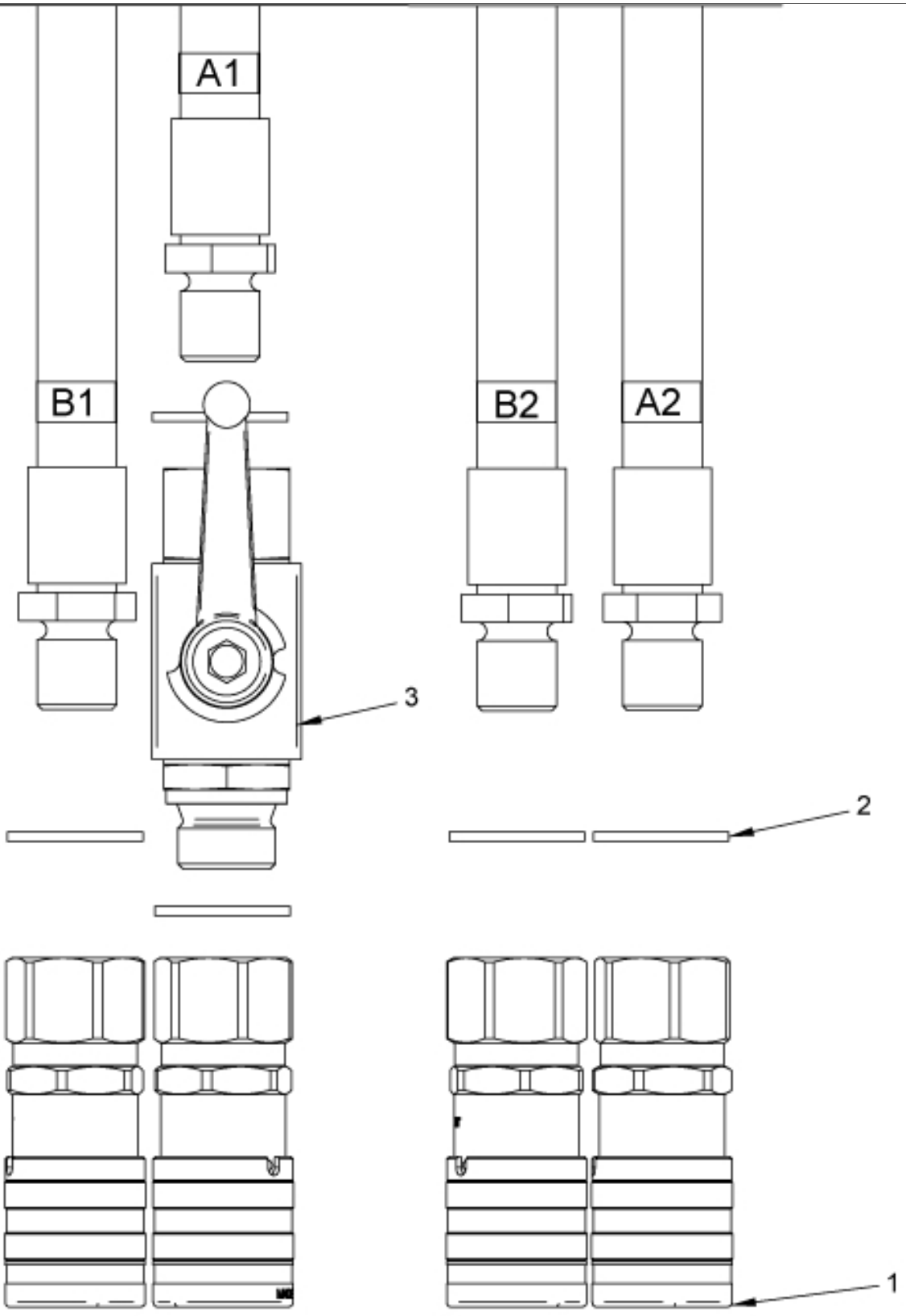

rQuick couplings LCS

© 2025 Jost

Part assemblies Quick couplings LCS

PartNo	Pos	Qty	Name	Specifications
5044976	1	1	Coupling	3/8" (5044946)
5013853	2	1	Dowty washer	Tredo 1/2", Part is included in kit 60007907 Hose cpl., 9032177 Hose cpl.
5033898	3	1	Shut-off valve	1/2"

© 2025 Jost