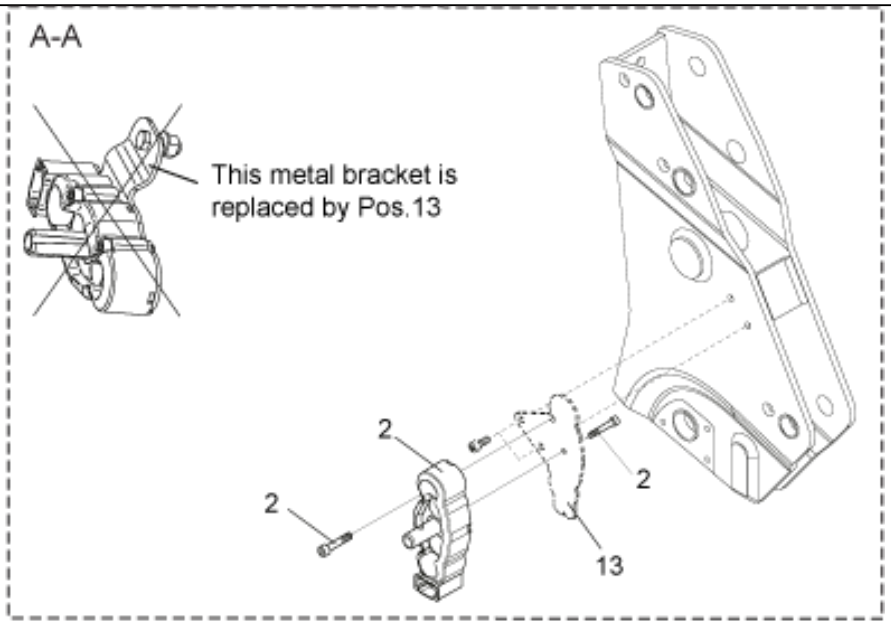
A-A
This metal bracket is
replaced by Pos.13
2
2
2
13

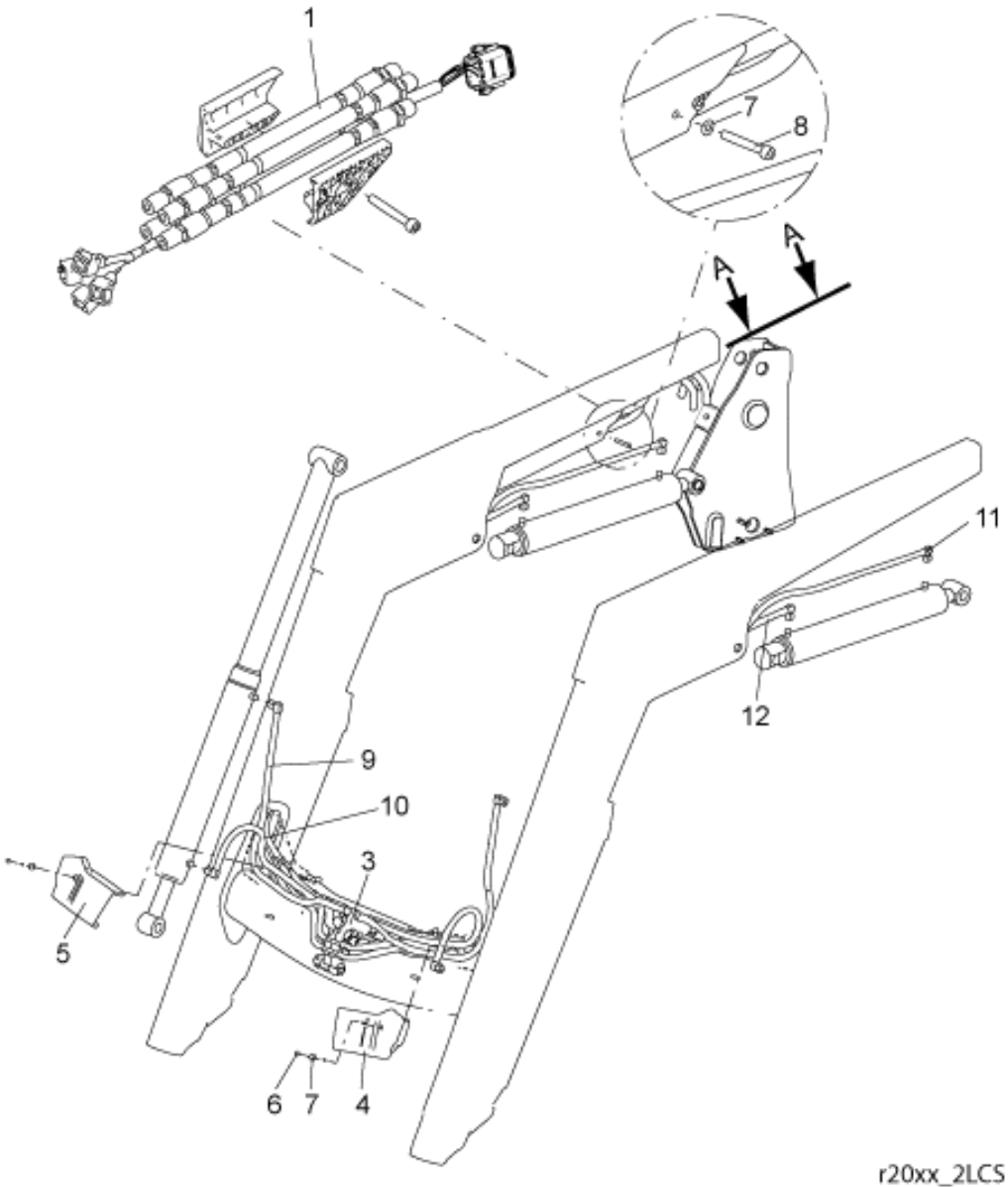
1
7
8
A
A
11
12
9
10
3
5
6
7
4
r20xx_2LCS


© 2025 Jost

**Part assemblies** Hydraulics LCS

| PartNo | Pos | Qty | Name | Specifications |
|---|---|---|---|---|
| 9032572 | 1 | 1 PCS | Main hose kit | |
| 5034234 | 2 | 1 | Parking support kit | Replaces 5034233, 5033972 |
| 10550258 | 3 | 1 | Compact valve | 7332743 |
| 5220601 | 4 | 1 | Hose clamp LH | |
| 5220603 | 5 | 1 | Hose clamp RH | |
| 5011910 | 6 | 2 | Nut | |
| 5013101 | 7 | 3 | Washer | BRB 8,4 x 16 |
| 5005128 | 8 | 1 | Screw | MC6S 8x60 |
| 9032603 | 9 | 2 PCS | Hose | 3/8" L=900mm (9031142) |
| 9032632 | 10 | 2 PCS | Hose | 3/8" L=680mm (9031149) |
| 9032673 | 11 | 2 PCS | Hose | 3/8" L=1890mm (9031130) |
| 9032672 | 12 | 2 PCS | Hose | 3/8" L=1370mm (9031120) |
| 5034122 | 13 | 1 PCS | Bracket | |


© 2025 Jost