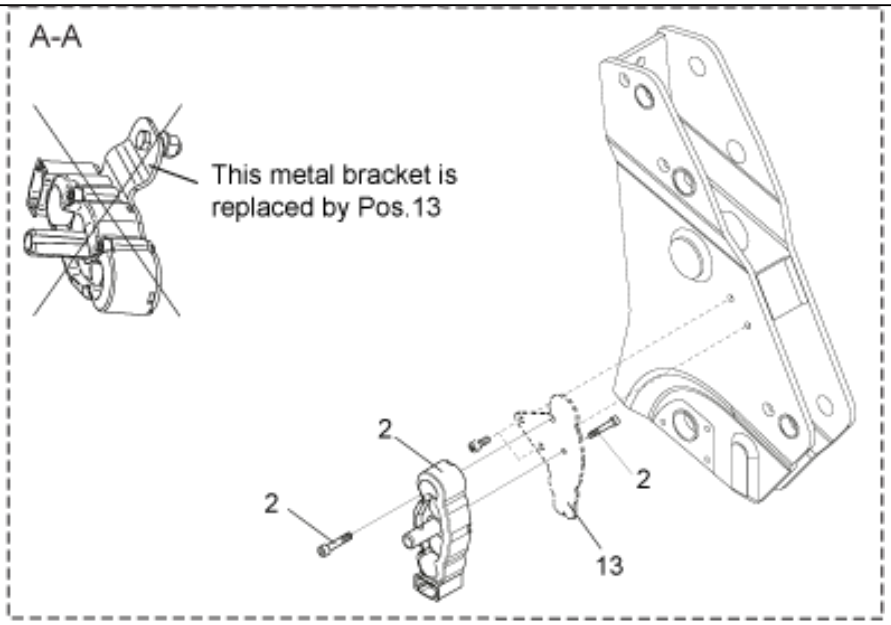
A-A
This metal bracket is
replaced by Pos.13
2
2
2
13

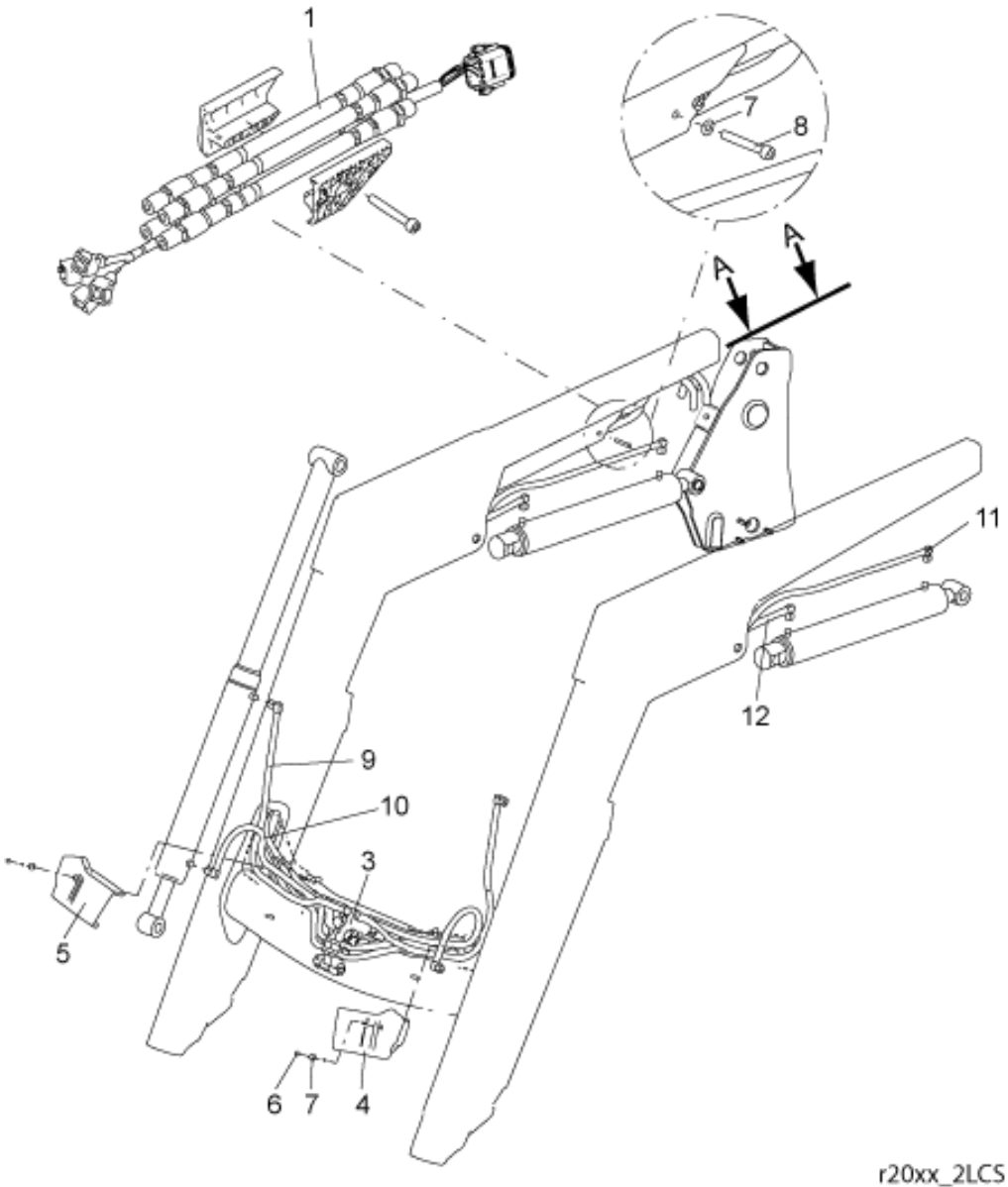
1
7
8
A
A
11
12
9
10
3
5
6
7
4
r20xx_2LCS

© 2025 Jost

Part assemblies Hydraulics LCS

PartNo	Pos	Qty	Name	Specifications
9032580	1	1 PCS	Main hose kit	Replaces 9031650
5034234	2	1	Parking support kit	Replaces 5034233, 5033972
10550258	3	1	Compact valve	7332743
5220601	4	1	Hose clamp LH	
5220603	5	1	Hose clamp RH	
5011910	6	2	Nut	
5013101	7	3	Washer	BRB 8,4 x 16
5005128	8	1	Screw	MC6S 8x60
9032604	9	2	Hose	3/8" L=970mm (9031143)
9032631	10	2	Hose	3/8" L=750mm (9031148)
9032534	11	2	Hose	3/8" L=2000mm (9031137)
9032525	12	2	Hose	3/8" L=1480mm (9031127)
5034122	13	1 PCS	Bracket	

© 2025 Jost