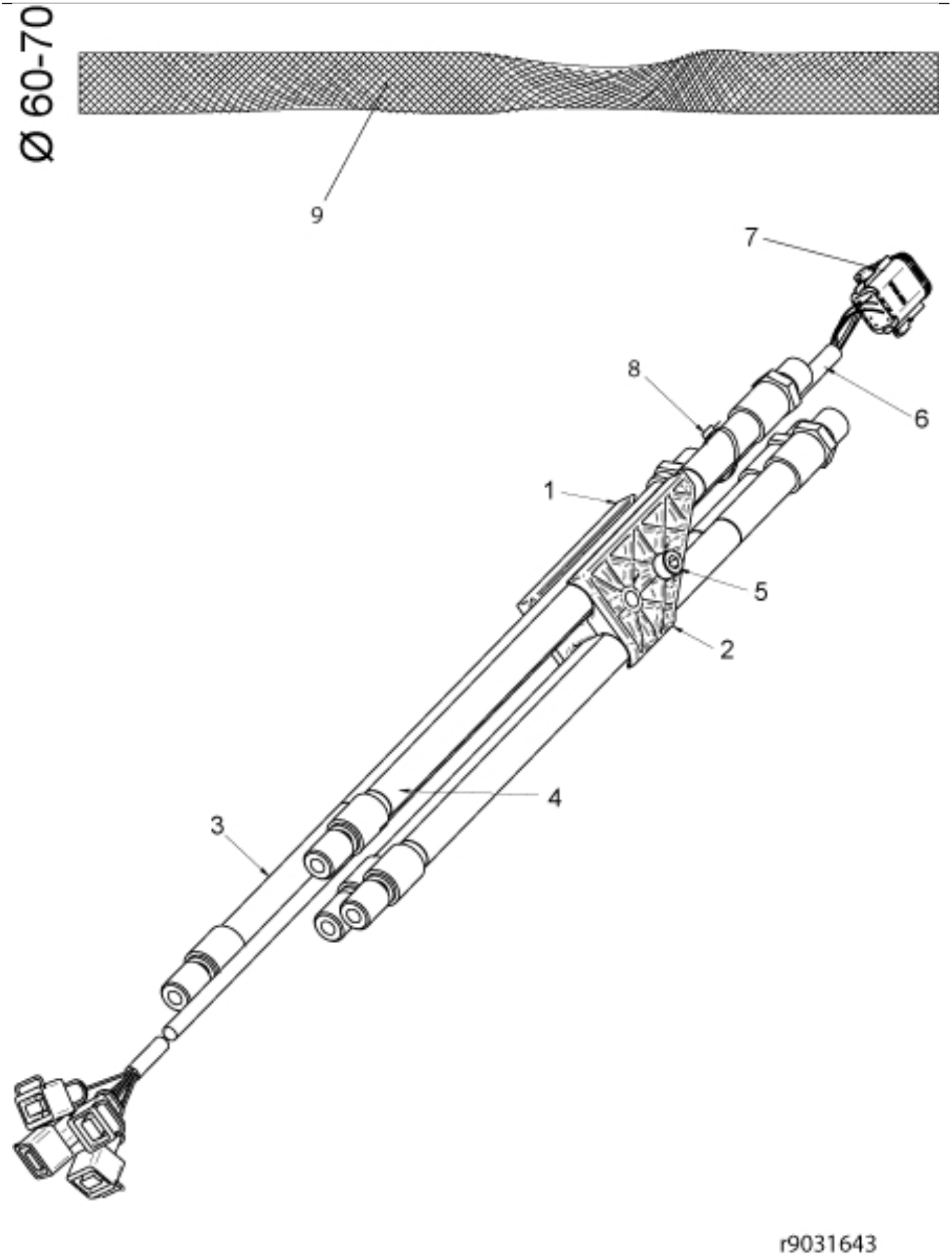

© 2025 Jost

Part assemblies	Main hose kit
Specification	Specification: Replaces 9031644

PartNo	Pos	Qty	Name	Specifications
5215052	1	1	Hose clamp	
5215051	2	1	Hose clamp	
9032541	3	1 PCS	Hose	1/2" L=3090mm (9031676)
9032513	4	3 PCS	Hose	1/2" L=3050mm (9031111)
5004918	5	1	Screw	MC6S 8x55
5102202	6	1	Cable	L=3600mm (5102126)
5101083	7	1	• Connector, male	8-Pole
5033621	8	5	Cable tie	4.6x150
5033894	9	1	Protection sleeve	800mm, D=60-70mm

© 2025 Jost