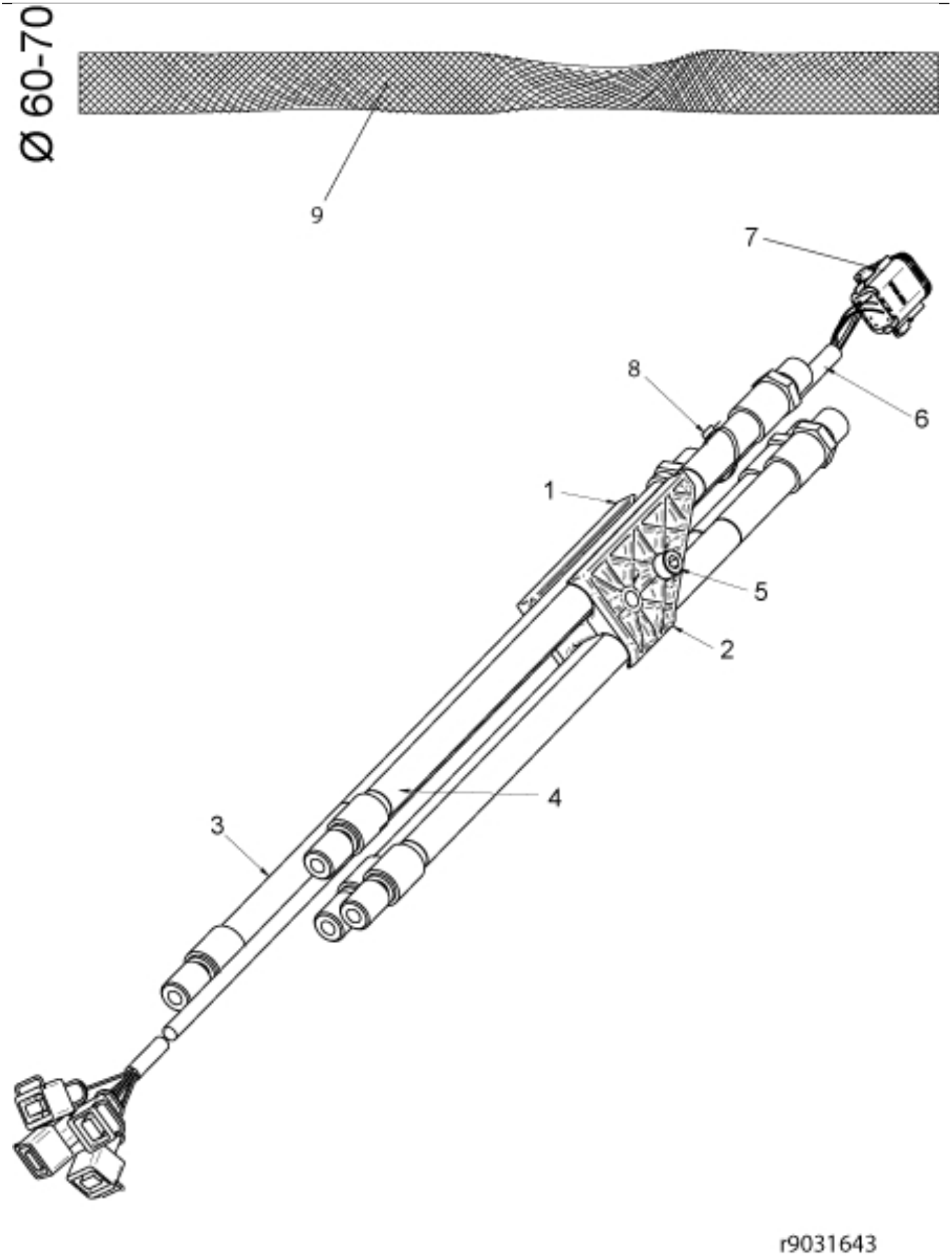

© 2025 Jost

Part assemblies	Main hose kit
Specification	Specification: Replaces 9031646

PartNo	Pos	Qty	Name	Specifications
5215052	1	1	Hose clamp	
5215051	2	1	Hose clamp	
9032543	3	1 PCS	Hose	1/2" L=3540mm (9031678)
9032515	4	3 PCS	Hose	1/2" L=3500mm (9031113)
5004918	5	1	Screw	MC6S 8x55
5102200	6	1	Cable	L=4070mm (5102116)
5101083	7	1	• Connector, male	8-Pole
5033621	8	6	Cable tie	4.6x150
5033894	9	1	Protection sleeve	800mm, D=60-70mm

© 2025 Jost