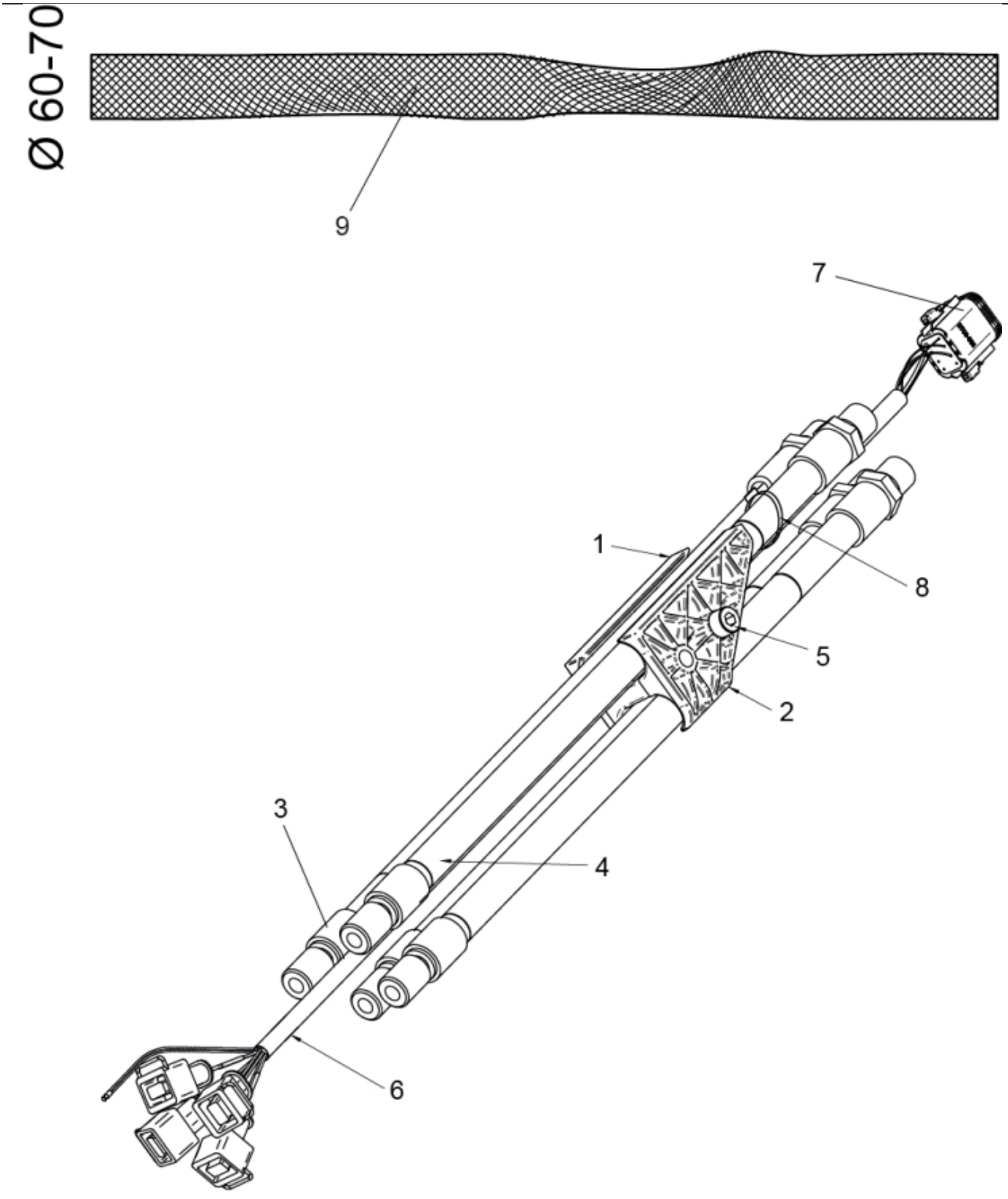

r9032571

© 2025 Jost

Part assemblies Main hose kit

PartNo	Pos	Qty	Name	Specifications
5215052	1	1	Hose clamp	
5215051	2	1	Hose clamp	
9032548	3	1 PCS	Hose	1/2" L=4040mm (9031728)
9032518	4	3	Hose	1/2" L=4000mm (9031116)
5004918	5	1	Screw	MC6S 8x55
5102196	6	1	Cable	L=4600mm (5102127)
5101083	7	1	• Connector, male	8-Pole
5033621	8	7	Cable tie	4.6x150
5033894	9	1	Protection sleeve	800mm, D=60-70mm

© 2025 Jost