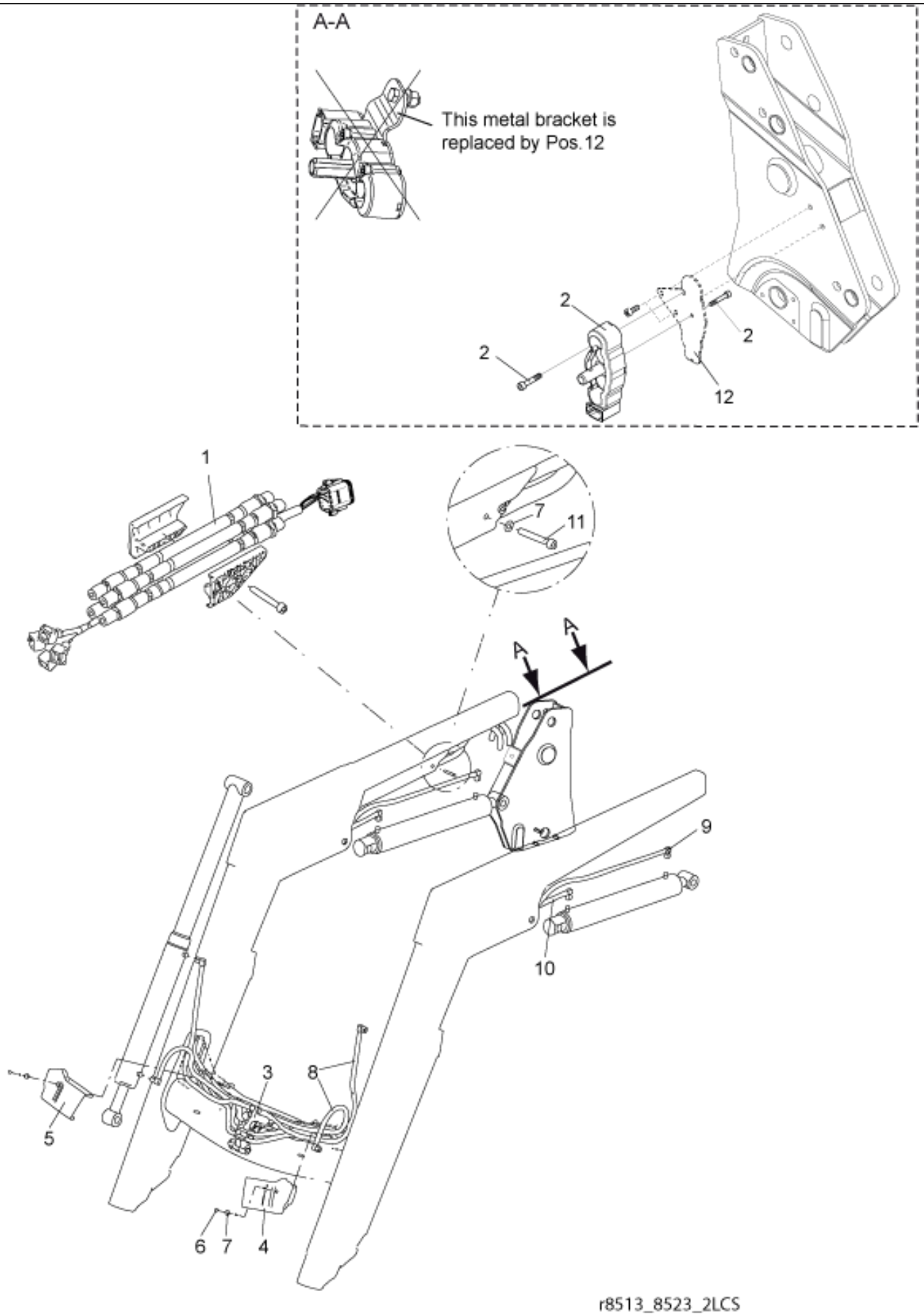
A-A
This metal bracket is
replaced by Pos.12
2
2
2
12
1
7
11
A
A
9
10
3
8
5
6
7
4
r8513_8523_2LCS

© 2025 Jost

Part assemblies Hydraulics LCS

PartNo	Pos	Qty	Name	Specifications
9032574	1	1 PCS	Main hose kit	Replaces 9031645
5034234	2	1	Parking support kit	Replaces 5034233, 5033972
10550258	3	1	Compact valve	7332743
5220601	4	1	Hose clamp LH	
5220603	5	1	Hose clamp RH	
5011910	6	2	Nut	
5013101	7	3	Washer	BRB 8,4 x 16
9032602	8	4 PCS	Hose	3/8" L=830mm (9031141)
9032535	9	2 PCS	Hose	3/8" L=2250mm (9031138)
9032526	10	2 PCS	Hose	3/8" L=1720mm (9031128)
5005128	11	1	Screw	MC6S 8x60
5034122	12	1 PCS	Bracket	

© 2025 Jost